FOR.A®
INNOVATIONS IN VIDEO
and AUDIO TECHNOLOGY

OPERATION MANUAL

VTG-15

Video Timer

1st Edition - Rev.1

FOR-A COMPANY LIMITED

Precautions

Important Safety Warnings

[Power]

Caution	Operate unit **only** on the specified supply voltage.
	Disconnect power cord by connector only. **Do not** pull on cable portion.
Stop	**Do not** place or drop heavy or sharp-edged objects on power cord. A damaged cord can cause fire or electrical shock hazards. Regularly check power cord for excessive wear or damage to avoid possible fire / electrical hazards.

[Grounding]

Caution	**Ensure** unit is properly grounded at all times to prevent electrical shock hazard.
Hazard	**Do not** ground the unit to gas lines, units, or fixtures of an explosive or dangerous nature.

[Operation]

Hazard	**Do not** operate unit in hazardous or potentially explosive atmospheres. Doing so could result in fire, explosion, or other dangerous results.
Hazard	**Do not** allow liquids, metal pieces, or other foreign materials to enter the unit. Doing so could result in fire, other hazards, or unit malfunction.
	If foreign material does enter the unit, turn power off and disconnect power cord **immediately**. Remove material and contact authorized service representative if damage has occurred.

[Circuitry Access]

	Do not remove covers, panels, casing, or access circuitry with power applied to the unit! Turn power off and disconnect power cord prior to removal. Internal servicing / adjustment of unit should only be performed by qualified personnel.
Stop	**Do not** touch any parts / circuitry with a high heat factor. Capacitors can retain enough electric charge to cause mild to serious shock, even after power is disconnected. Capacitors associated with the power supply are especially hazardous. Avoid contact with any capacitors.
Hazard	Unit **should not** be operated or stored with cover, panels, and / or casing removed. Operating unit with circuitry exposed could result in electric shock / fire hazards or unit malfunction.

[Potential Hazards]

Caution	If abnormal smells or noises are noticed coming from the unit, turn power off immediately and disconnect power cord to avoid potentially hazardous conditions. If problems similar to above occur, contact authorized service representative **before** attempting to again operate unit.

[Fuse]

Caution	If this product is equipped with a fuse, fuse replacement should only be performed by qualified personnel. **Power off** equipment and disconnect power cord prior to replacement. Replace **only** with fuse of same type, voltage rating, and current rating as specified for the unit.

[Backup Battery]

Caution	If this product contains a memory backup battery (either dry cell or rechargeable) and when it is necessary to replace the battery, have work done by the shop where you purchased the product.

Upon Receipt

Unpacking

VTG-15 units and their accessories are fully inspected and adjusted prior to shipment. Operation can be performed immediately upon completing all required connections and operational settings.

Check your received items against the packing lists below.

ITEM	QTY	REMARKS
VTG-15	1	
AC Cord	1	
Operation Manual	1	

Option

ITEM	QTY	REMARKS
VTG-15 GPS	1	VTG-15 GPS receiver (preinstalled) GPS antenna, 5-meter cable supplied (waterproof)
Rack mount bracket set (type 1)	1 pr.	For single unit mount to a EIA 1RU rack space
Rack mount bracket set (type 2)	1 pr.	For mounting 2 units to a EIA 1RU rack space

Check

Check to ensure no damage has occurred during shipment. If damage has occurred, or items are missing, inform your supplier immediately.

Rack Mounting

The VTG-15 can be either single unit or dual unit mounted to a 1RU space in EIA standard rack units. Racking mounting requires purchase of one of the two available rack mount kits.
When single unit mounting the single mount kit with one extended rack ear must be used. When dual unit mounting the dual mount kit with standard size rack ears must be used. Consult your FOR-A supplier to order either of these options.

Table of Contents

1. Prior to Starting 1
   1-1. Welcome 1
   1-2. About the VTG-15 1
   1-3. About This Manual 2

2. Panel Descriptions 3
   2-1. Front Panel 3
   2-2. Rear Panel 4

3. Connections 5
   3-1. Connection Example 1: COMPOSITE 5
   3-2. Connection Example 2: Y/C 5
   3-3. Connection Example 3: Master/Slave 6

4. Operation 7
   4-1. Power ON 7
   4-2. Menu Operation 8
      4-2-1. Display and Exit Menu 8
      4-2-2. Changing the Parameter Value 9
   4-3. Changing the Display Format 10
   4-4. Correcting DATE/TIME 12
   4-5. Adjusting the Display Position 14
   4-6. Menu Settings in Master/Slave Mode 16
      4-6-1. Linked Operations Based on Correction Pulse 16
      4-6-2. Linked Operations Based on Dedicated Serial 16
      4-6-3. Linked Display ON/OFF Operations 16

5. Menu 17
   5-1. MAIN MENU 17
   5-2. TIME 17
   5-3. DISPLAY1 18
      5-3-1. 1-LINE/2-LINE(DISPLAY) 19
      5-3-2. Display ON/OFF 19
   5-4. DISPLAY2 20
   5-5. REMOTE 21
   5-6. GPS (Optional) 22
      5-6-1. Reception Status/Signal Strength Display (for antenna installation) 23

6. MEMORY CLEAR, NTSC/PAL 24

7. Remote Control 26
   7-1. REMOTE Connector Pin Assignment 26
   7-2. Remote Control Settings 27
      7-2-1. Master/Slave Time Correction/Time Linking Operations 31
      7-2-2. Remote Linking 32
      7-2-3. Connecting with the Dedicated Serial 33
   7-3. Remote Input Circuit 34

8. GPS Option 35
   8-1. GPS Antenna Cable Length and Antenna Installation Example 36
   8-2. Notes on GPS Antenna Installation 37
      8-2-1. Too Many Obstructions Around Antenna 37
      8-2-2. Metal Objects Around the Antenna 37

8-2-3. Radio Transmitters or Other Radiowave-Emitting Equipment Around the Antenna...37
8-2-4. GPS Receiver Installed Near Noise-Generating Equipment 37

9. If Problems Occur 38

10. Specifications and Dimensions 39
10-1. Unit Specifications.....39
10-2. External Dimensions 41

Appendix 1. Menu List 1

Appendix 2. Date/Time Display Format.....2

Appendix 3. Zero Suppression Display 3

1. Prior to Starting

1-1. Welcome

Congratulations! By purchasing VTG-15 Video Timer you have entered the world of FOR-A and its many innovative products. Thank you for your patronage and we hope you will turn to FOR-A products again and again to satisfy your video and audio needs.

FOR-A provides a wide range of products, from basic support units to complex system controllers, which have been increasingly joined by products for computer video based systems. Whatever your needs, talk to your FOR-A representative. We will do our best to be of continuing service to you.

1-2. About the VTG-15

The VTG-15 is a Video Timer which displays the date and time, including everything from the current year to the seconds display, on a video monitor. The display is a 24x16 dot matrix display which is easy to read. With the optional VTG-15GPS, the clock can be corrected based on the received GPS signal.

Features

- Capability to display year, month, date, hours, minutes, and seconds in a composite display or Y/C video.
- Precision of ±10 seconds per month (at temperatures of 0°C to 40°C) provided by internal realtime clock
- Time correction function based on external correction pulse and dedicated serial connection
- Capability to synchronize multiple units using master/slave settings
- 12-hour/24-hour time display switching. AM and PM can be displayed in 12-hour display mode.
- 24x16 dot matrix display with edges for easy reading
- 1-line/2-line display format switching
- Internal battery backup circuit allows the time to be updated even if the power is cut off after the clock has started running.
- Optional GPS signal time correction function effectively eliminates clock errors.

1-3. About This Manual

This manual is intended to help the user easily operate the VTG-15 and make full use of its functions during operations. Before connecting or operating your unit, read this operation manual thoroughly to ensure you understand the product. After reading, it is important to keep this manual in a safe place and available for reference.

Font Conventions
The following conventions are used through out this manual:

- Boxed text (for example MATT) is used for buttons.
- Shaded text (such as OFF) is used for the setting parameters and values in the menus.

2. Panel Descriptions

2-1. Front Panel

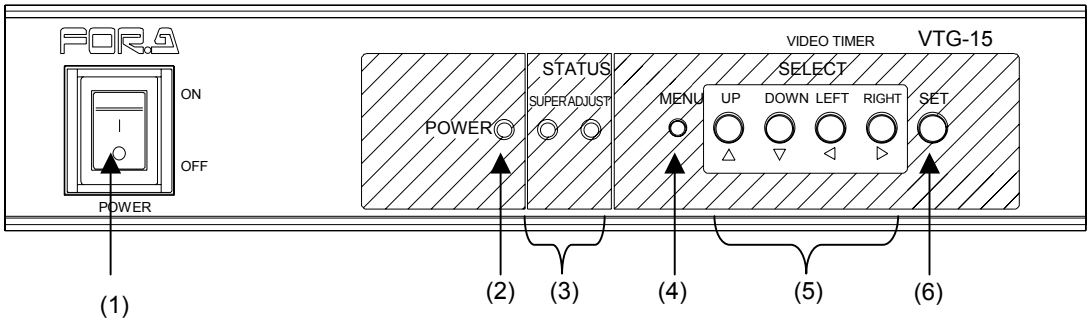

(1) Power Switch
Used to turn unit power ON/OFF.

(2) POWER LED
Power LED will be lit green whenever power switch is set to ON and power applied to the unit.

(3) STATUS LED

SUPER ····· SUPER LED will be lit green whenever the time display is set to ON, and unlit when the time display is set to OFF.

ADJUST ····· ADJUST LED will be lit green during the time correction. When the dedicated serial communication is performed properly (When the remote linking operates properly.), the LED will be lit green. Otherwise, the LED will be unlit. If the GPS option is installed, the LED will be lit whenever the GPS signal is properly received and the remote linking operates properly. The LED will be unlit when no GPS signal is received or antenna is not connected.

(4) MENU Button
When MENU button is pressed, the menu is displayed. Press the button again to return to the normal display.

IMPORTANT
In order to display menu, the video signal must be input to the VTG-15.

(5) SELECT Buttons (UP, DOWN, LEFT, RIGHT)
Used for the menu settings.

(6) SET Button
Used to make menu setting.

2-2. Rear Panel

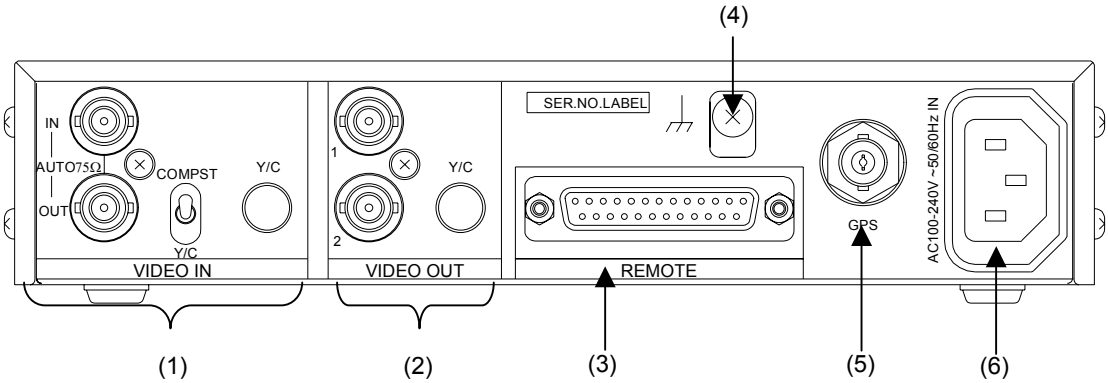

(1) VIDEO IN
Used to input video signals. Either the analog composite or Y/C signal can be selected by turning the COMPST⇔Y/C toggle switch. When using analog composite, the signal can be looped through from the OUT connector to other device. The OUT connector is automatically terminated when no cable is connected.

(2) VIDEO OUT
Used to output video signals. When analog composite signal is input, the same signals are output from connector 1 and 2. Y/C signal is output from the Y/C output connector. (Only the signal selected by the COMPST⇔Y/C toggle switch on the VIDEO IN can be output.)

(3) REMOTE
Used for external remote control and time correction pulse input.

(4) Ground Terminal
Used to ground unit and protect operator from electrical shock.

(5) GPS(Option)
Used to connect the GPS antenna (BNC connector).

IMPORTANT
The GPS connector should only be used for the GPS antenna. Do not connect any other cables to this connector.

(6) AC IN(AC100-240V 50/60Hz)
Used for connection to AC power source via supplied accessory power cord.

3. Connections

3-1. Connection Example 1: COMPOSITE

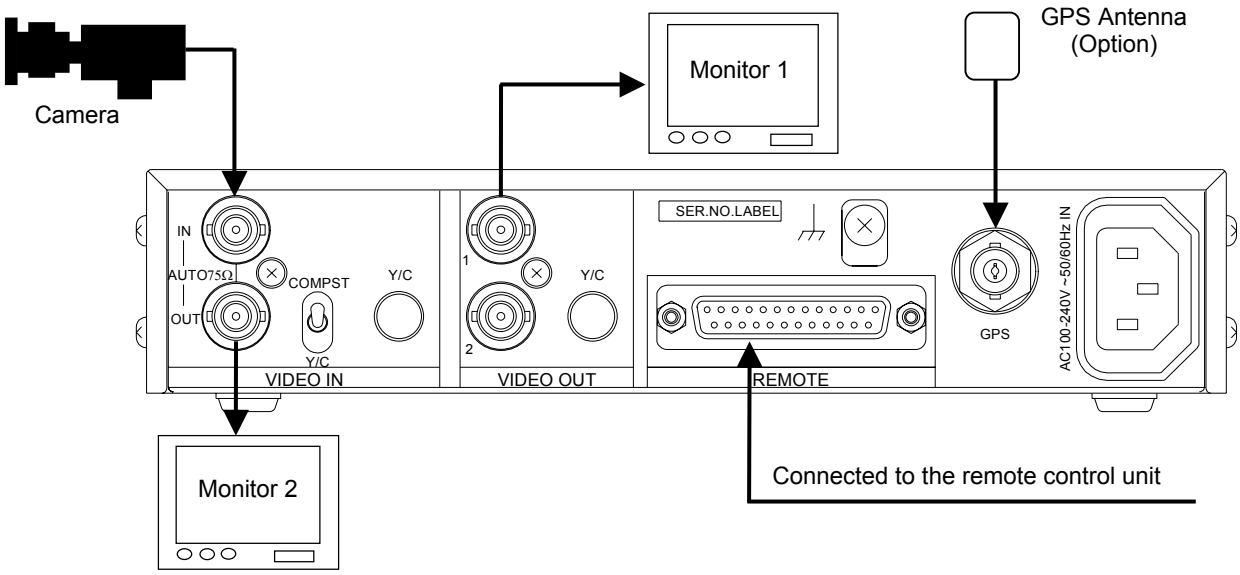

3-2. Connection Example 2: Y/C

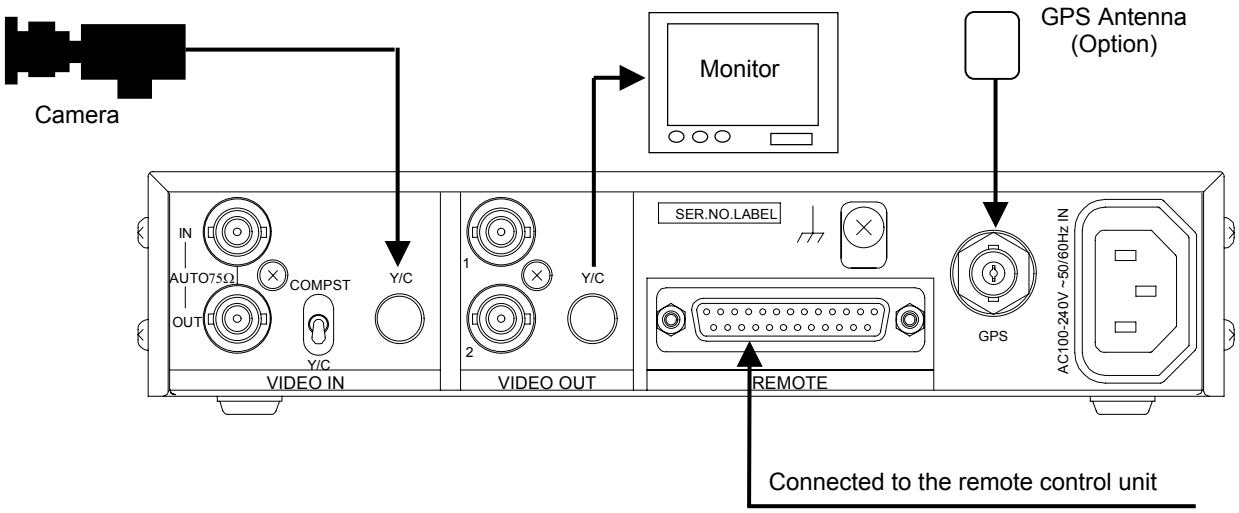

3-3. Connection Example 3: Master/Slave

In the VTG-15 system, as many as ten slave units can be linked to a single master unit.

◆ Example: one master and three slaves

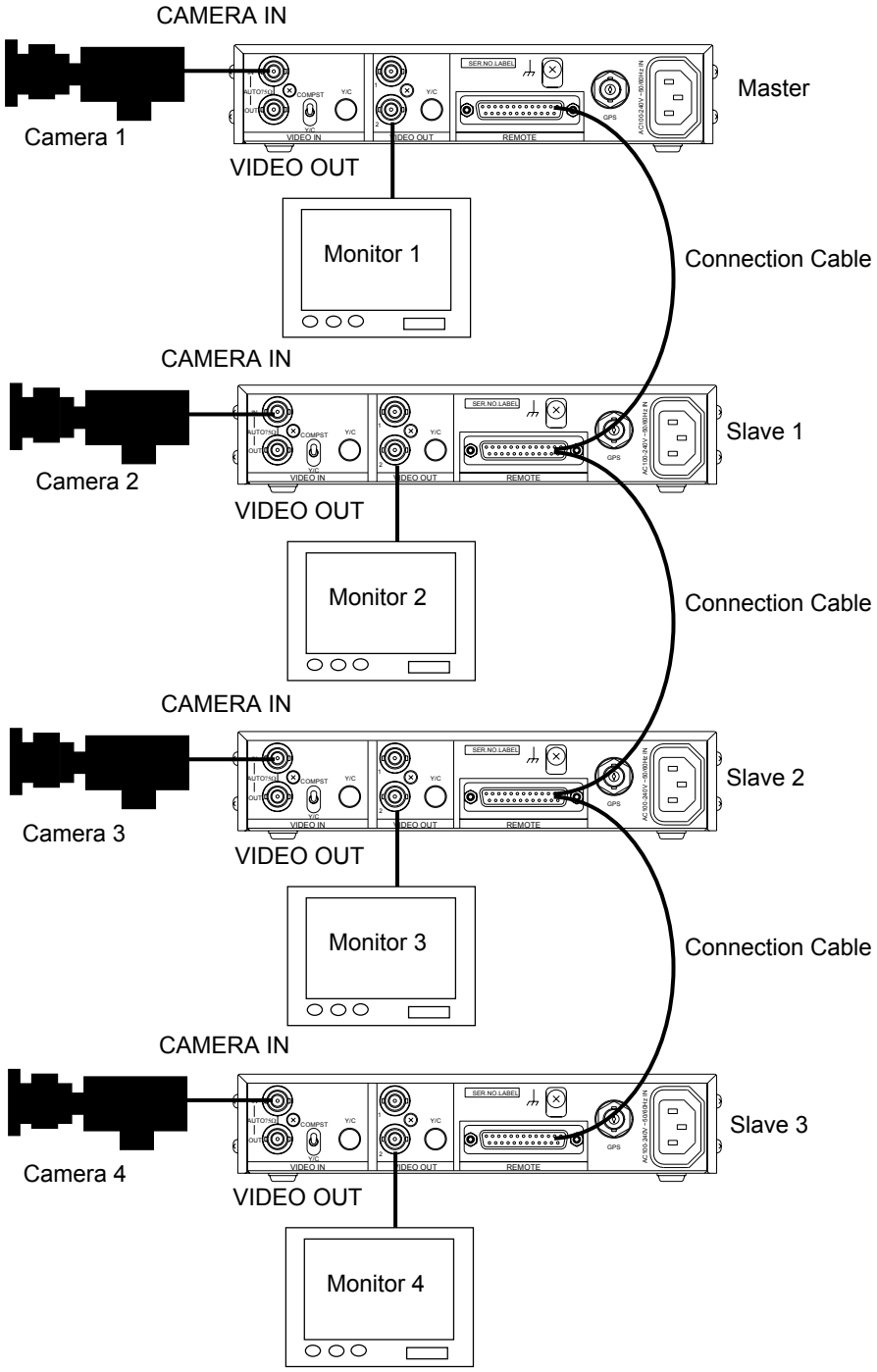

IMPORTANT
Refer to section 7-2-2 “Remote Linking” and 7-2-3 “Connecting with the Dedicated Serial” for more details about how to configure the system.

4. Operation

Since the VTG-15 has been configured at the factory for the settings you are most likely to need, it can be used immediately after the shipment. It is not necessary to change the factory default settings unless it is required.

The display position and format can be changed by the menu operation. This section explains about the basic menu operation, time corrections and changing display position and display format. Refer to section 5 “Menu” for more details about the other menus and functions.

4-1. Power ON

Once connecting the video signal cable and turning on the power of the VTG-15, the date and time are displayed on the monitor as shown in the figure below.

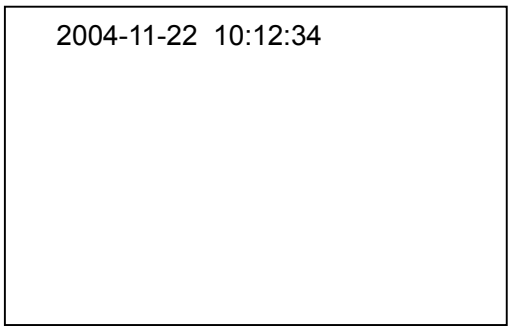

Normal display at startup

IMPORTANT
The VTG-15 stores the settings that are made right before the power is turned off. If the power is turned off during the menu mode, the VTG-15 stores the settings that are made right before entering the menu mode.

IMPORTANT
The display date/time data is stored by the lithium battery. The battery life is approximately ten years (at room temperature 25℃). If a backup error occurs, “BACKUP ERROR TIME RESET” message is shown on the monitor. If this message appears, contact your supplier for replacing the battery. Also, menu setting data except date/time data is stored in the backup memory. The backup memory is tested at startup, and no message is shown when no error occurs. If an error occurs, “BACKUP ERROR” message is shown on the monitor. The VTG-15 is restarted and the menu settings are initialized to the default settings. If this is your case, contact your supplier immediately.

4-2. Menu Operation

4-2-1. Display and Exit Menu

1) To display【MAIN MENU】on the output monitor, press MENU button on the front panel. The output monitor should be connected to the VIDEO OUT connector on the rear panel of the VTG-15.

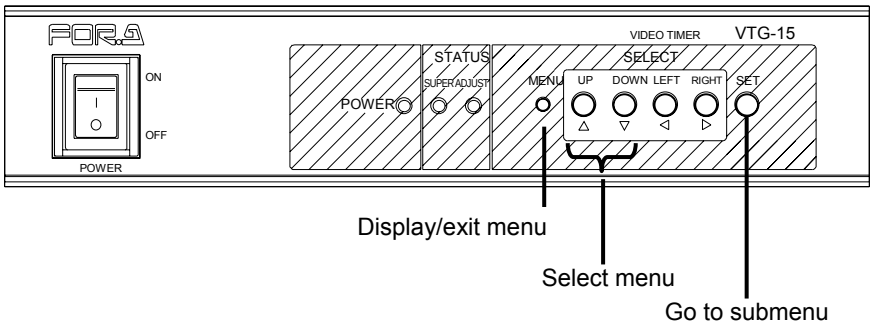

IMPORTANT
In order to display menu, the video signal must be input to the VTG-15.

2) Press SELECT buttons【▲ ▼】 to select menu. Press SET button to go to the selected menu. If there are submenus in the selected menu, repeat the same step.

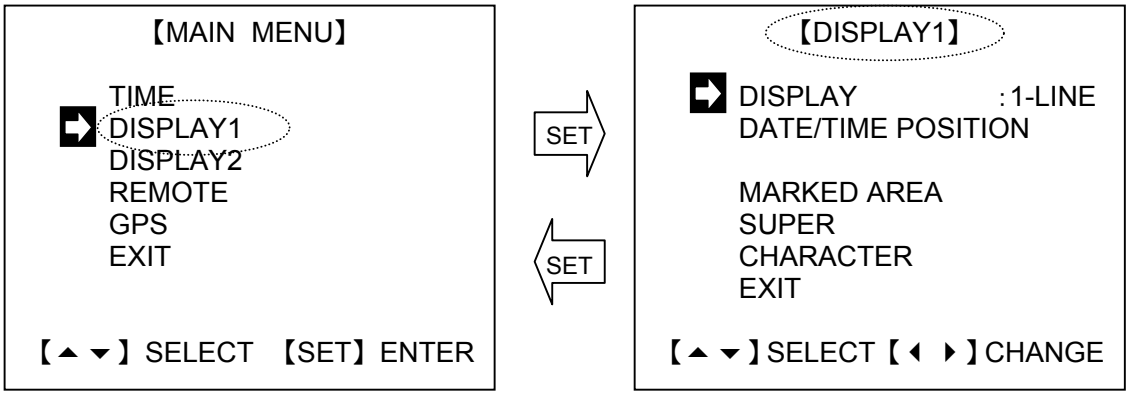

To return to the previous menu select EXIT and press SET button.

3) To exit menu, press MENU button.

4-2-2. Changing the Parameter Value

◆ **Changing the parameter value**

1) Press SELECT buttons 【▲ ▼】 to select the desired parameter and press SET button.

2) Press SELECT buttons 【◀ ▶】 to change the parameter value.

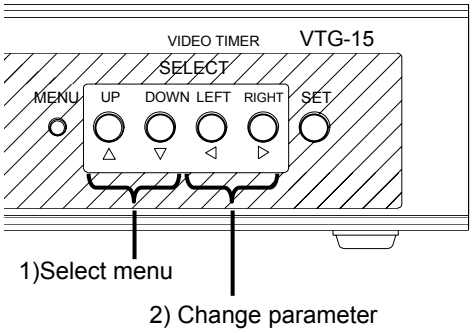

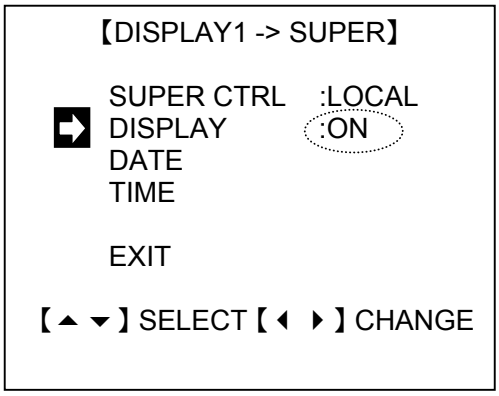

◆ **Chenging the display position (MARKED AREA)**

MARKED AREA is use to change the display position.

1) Press MEMU button to display 【MAIN MENU】. Move the cursor to DISPLAY 1 and press SET button. 【DISPLAY 1】 menu is displayed.

2) Select MARKED AREA using 【▲ ▼】 buttons. 【MARKED AREA】 menu is displayed.

3) To see the current display position, press SET. The current display position is indicated on the monitor as shown in the figure on the right below. To return to the menu, press the SET again.

4) Change the marked area (dotted line) using SELECT buttons 【▲ ▼ ◀ ▶】. The rectangular area inside the dotted line is the area that the POSITION setting can be made on a per-pixel basis.

5) Confirm the position and press SET to return to the menu.

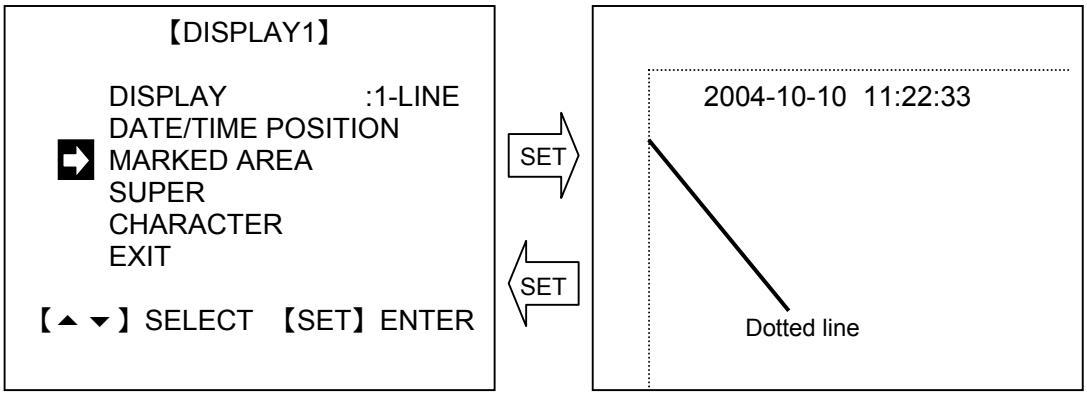

NOTE
The setting procedure varies depending on the parameter. Refer to the corresponding instructions in this manual.

4-3. Changing the Display Format

This section explains how to change the date/time display format. In the VTG-15 factory default setting, the date/time is displayed as shown in the first row of the table below. The following example is instructed to change the display format as shown in the second row of the table below by:

- changing the month display to the alphabetic form
- changing the order of the date/time display
- removing the second display
- adding the day of week display.

Factory default date/time display	2004-11-22 09:34:56
Modified date/time display	NOV-22-2004 (MON) 09:34

1) Press the MENU button to display the【MAIN MENU】. Move the cursor to DISPLAY 1 and press SET button. 【DISPLAY 1】menu is displayed on the monitor.

1)
【MAIN MENU】

TIME
DISPLAY1
DISPLAY2
REMOTE
GPS

EXIT

【▲ ▼】SELECT 【SET】ENTER

SET

2) Select SUPER using SELECT buttons【▲ ▼】and press SET button. 【DISPLAY → SUPER】 menu is displayed on the monitor.

2)
【DISPLAY1】

DISPLAY :1-LINE
DATE/TIME POSITION

MARKED AREA
SUPER
CHARACTER
EXIT

【▲ ▼】SELECT 【SET】ENTER

SET

3) Select DATE using SELECT buttons【▲ ▼】and press SET button. 【SUPER → DATE】menu is displayed on the monitor.

3)
【DISPLAY1 → SUPER】

SUPER CTRL :LOCAL
DISPLAY :ON
DATE
TIME

EXIT

【▲ ▼】SELECT 【SET】ENTER

SET

4) Move the cursor to DAY OF WEEK using SELECT buttons【▲ ▼】. Use【◀ ▶】buttons to change the parameter value to ON instead of OFF. The day of the week is added to the date display.

Select EXIT and press SET button to return to 【DISPLAY1 → SUPER】 menu.

Select TIME in【DISPLAY1 → SUPER】menu and press SET button. 【SUPER → TIME】 menu is displayed on the monitor.

4) 【SUPER → DATE】

YEAR :ON
MONTH :ON
DAY :ON
➡ DAY OF WEEK :ON

EXIT

【▲ ▼】SELECT【◀ ▶】CHANGE

SET

(DISPLAY1->SUPER)

SET

5) Move the cursor to SECOND using SELECT buttons【▲ ▼】. Use【◀ ▶】buttons to change the parameter value to OFF instead of ON. The second display dissapears from the time display.

Press MENU button to exit menu.

5) 【SUPER → TIME】

HOUR :ON
MINUTE :ON
➡ SECOND :OFF
AM/PM : ------

EXIT

【▲ ▼】SELECT【◀ ▶】CHANGE

6) Press MENU button again to display 【MAIN MENU】. Select DISPLAY2 in【MAIN MENU】and press SET button. 【DISPLAY2】 menu is displayed on the monitor.

6) (MAIN MENU)

SET

7) Move the cursor to DATE FORMAT. Change the parameter value to M-D-Y instead of Y-M-D using 【◀ ▶】 buttons. The display order of the date is changed to month, date, and year.

Next, move the cursor to MONTH using 【▲ ▼】 buttons. Change the parameter value to JAN-DEC instead of 01-12 using【◀ ▶】buttons. The month is displayed in the alphabetic format.

Press MENU button to exit menu.

7) 【DISPLAY2】

DATE FORMAT :M-D-Y
YEAR :YYYY
➡ MONTH :JAN-DEC
HOUR :24H
AM/PM :------
0 SUPPRESS :OFF
EXIT

【▲ ▼】SELECT【◀ ▶】CHANGE

4-4. Correcting DATE/TIME

In the VTG-15, the date/time are corrected in TIME SETUP menu. To display TIME SETUP menu, go to 【MAIN MENU】→【TIME】→【DATE/TIME】.

1) Press MENU button to display 【MAIN MENU】. Move the cursor to TIME and press SET button. 【TIME】menu is displayed on the monitor.

1)
【MAIN MENU】

➡ TIME
DISPLAY1
DISPLAY2
REMOTE
GPS

EXIT

【▲ ▼】SELECT 【SET】ENTER

SET

2) Move the cursor to DATE/TIME and press SET button.【DATE/TIME】menu is displayed on the monitor.

2)
【TIME】

➡ DATE/TIME
START/STOP

EXIT

【▲ ▼)SELECT 【SET)ENTER

SET

3) Move the cursor to the date/time using 【▲ ▼】 buttons. Press the SET button.

3)
【TIME→DATE/TIME】

2004 -10 -10 11 :22 :33

➡ 2004 -10 -10 11 :22 :33
SET
ADJUST
EXIT

【▲ ▼】SELECT 【SET】ENTER

SET

4) Move the cursor to the desired parameter. Change the parameter value using 【▲ ▼】 buttons.

When completed, press SET button.

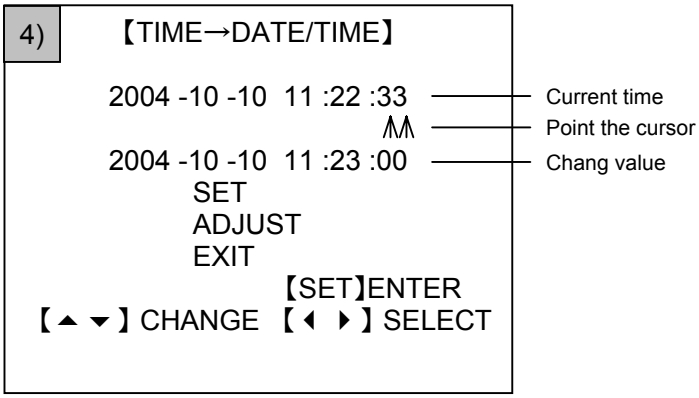

5) Move the cursor to SET in the menu. Press SET button.

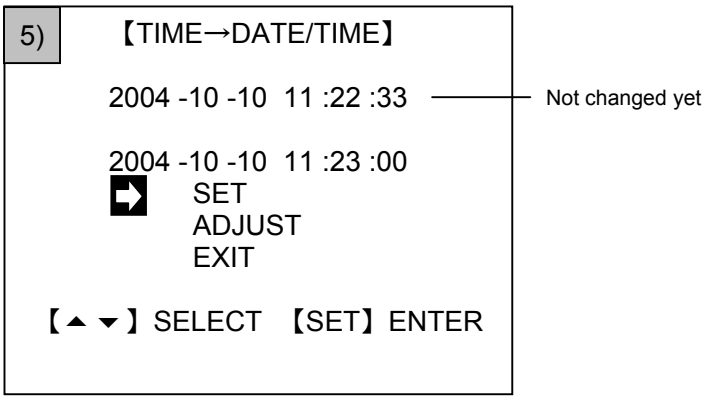

6) The current date/time display is updated to the new value. To reset the SECOND value to 00, move the cursor to ADJUST and press SET button.

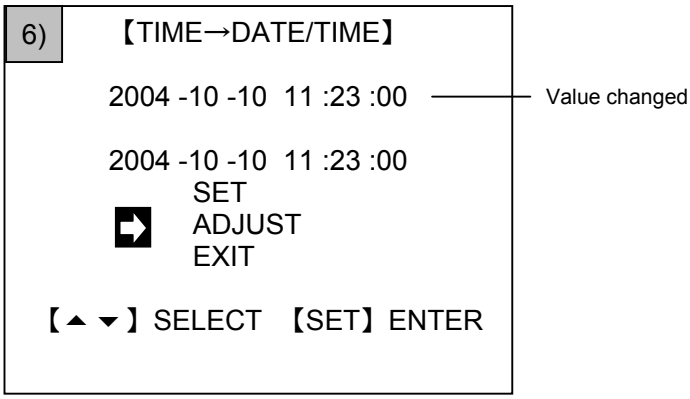

4-5. Adjusting the Display Position

The date/time display position is adjusted in【DISPLAY 1】menu by moving the rectangular area inside dotted line (MARKED AREA), or moving the date/time display itself in the rectangular area (DATE/TIME POSITION). In addition, the date and time can be moved together (1-LINE) or separately (2-LINE).

◆ Moving the date and time together

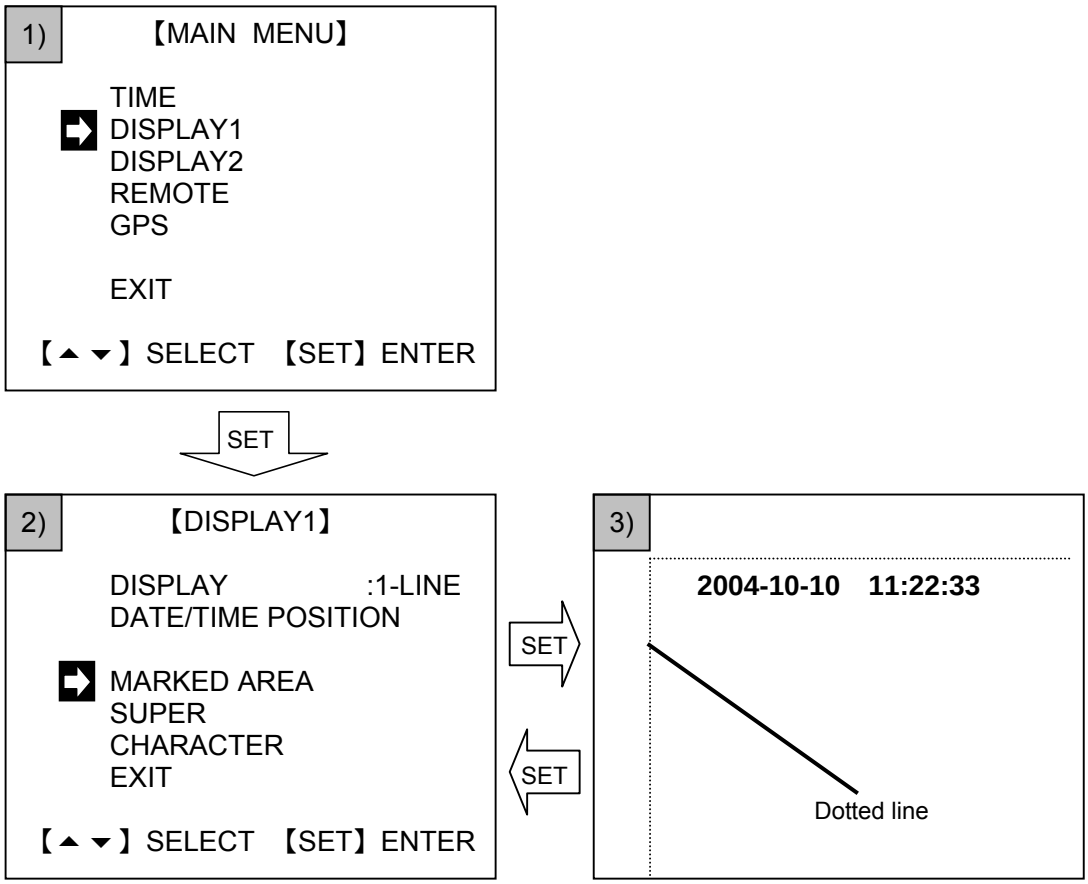

1) Press MEMU button to display 【MAIN MENU】. Move the cursor to DISPLAY 1 and press SET button. 【DISPLAY 1】menu is displayed.

2) Select MARKED AREA using 【▲ ▼】buttons. 【MARKED AREA】menu is displayed.

3) To see the current display position, press SET. The current display position is indicated on the monitor as shown in the figure (3) above. To return to the menu, press the SET again.

4) Change the marked area (dotted line) using SELECT buttons【▲ ▼ ◀ ▶】. The rectangular area inside the dotted line is the area that the POSITION setting can be made on a per-pixel basis.

5) Confirm the position and press SET to return to the menu.

◆ Moving the date and time individually

1) Press 【▲▼】buttons to move the cursor to DISPLAY in【DISPLAY1】menu. Press 【◀ ▶】buttons to change the parameter value to 2-LINE instead of 1-LINE. The time/date display appears on two lines.

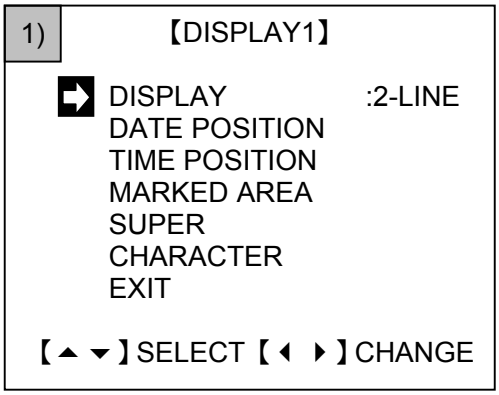

2) Move the cursor to DATE POSITION using 【▲▼】buttons, and then press SET button.

3) Move the date display position using 【◀ ▶】buttons. The date can be moved inside the dotted-lined rectangle on a per-character basis.

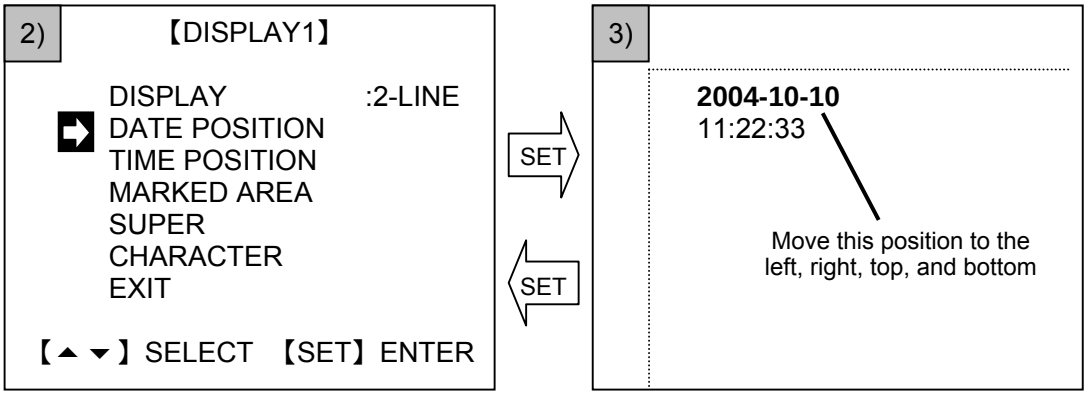

4) Press SET button to apply the setting and return to the menu.

5) To change the time display position, select TIME POSITION and repeat the steps (3) and (4).

IMPORTANT
If DISPLAY is set to 2-LINE, the date and time display can be moved separately. On the other hand, if set to 1-LINE, both the date and time display move together. If the display position exceeds the display area on the monitor, the date/time display cannot be indicated.

4-6. Menu Settings in Master/Slave Mode

When the master/slave function is used, it is possible to synchronize clock updates and date/time display ON/OFF operations on multiple VTG-15 units. As many as ten slave units can be linked and synchronized to a single master unit. For detailed information on master/slave connections, see section 7-2 “Remote Control Settings.”

For information on the connection procedure, see section 3-3 “Connection Example 3: Master/Slave ”. Connection cables are required for master/slave connections.
VTG-15 units can be synchronized using a dedicated serial signal or using a parallel signal. The connection procedure is the same in both cases, and it is also possible to use serial and parallel signals together. For information on the functions of the REMOTE connector pins, see section 7-1 “REMOTE Connector Pin Assignment.”

4-6-1. Linked Operations Based on Correction Pulse

Use the following menu settings to set up a master/slave connection and synchronize clock operations based on a correction pulse signal.

Menu Item		Master Unit Settings	Slave Unit Settings
REMOTE Menu	STATUS	MASTER	SLAVE
	ADJUST	1/DAY, 1/HOUR, 1/MIN	(*1)
	SERIAL LINK	OFF	OFF

(*1) When a unit is set to SLAVE, the ADJUST setting is disabled.

4-6-2. Linked Operations Based on Dedicated Serial

Use the following menu settings to set up a master/slave connection and synchronize clock operations based on a dedicated serial signal.

Menu Item		Master Unit Settings	Slave Unit Settings
REMOTE Menu	STATUS	MASTER	SLAVE
	SERIAL LINK	ON	ON

4-6-3. Linked Display ON/OFF Operations

These settings link the slave units to the date/time display ON/OFF operations of the master unit.

Menu Item		Master Unit Settings	Slave Unit Settings
REMOTE Menu	SUPER CTRL	LOCAL	REMOTE (*1)
	SUPER SENSE	---	LEVEL

(*1) When a unit is set to REMOTE, the DISPLAY setting on the DISPLAY1-SUPER menu is disabled.

IMPORTANT
The display is turned off if remote SUPER_IN is in the open state (e.g., if the remote connector is not connected) while SUPER CTRL is set to REMOTE. (See section 7-2 “Remote Control Settings” for more details.)

5. Menu

5-1. MAIN MENU

Press MENU button to display【MAIN MENU】. To open menu, select the desired menu and press SET button.

IMPORTANT
The firmware version is shown at the lower right of the menu display.

【MAIN MENU】

➡ TIME
DISPLAY1
DISPLAY2
REMOTE
GPS
EXIT VER.01-01

【▲▼】SELECT 【SET】ENTER

5-2. TIME

【TIME】menu has two submenus. To open a submenu, select the desired submenu and press SET button.

【TIME】

➡ DATE/TIME
START/STOP

EXIT

【▲▼】SELECT 【SET】ENTER

【TIME→DATE/TIME】

2004 -10 -10 11 :22 :33

2004 -10 -10 11 :23 :33
SET
ADJUST
EXIT

【▲▼】SELECT 【SET】ENTER

【TIME→START/STOP】

2004 -10 -10 11 :23 :33

【SET】RETURN
【◀】STOP 【▶】START

Menu Item	Description	Procedure
DATE/TIME	Changes date and time	See section 4-4 “Correcting DATE/TIME” for more details.
START/STOP	Starts and stops time	Press【▶】to start, 【◀】to stop, and SET button to go to 【TIME】menu.

5-3. DISPLAY1

As well as【DISPLAY 2】 menu, 【DISPLAY 1】menu is used to change the display position and display format. (See Appendix 2 “Date/Time Display Format” for more details.) To display submenus, select the desired menu and press SET button.

【DISPLAY1】

➡ DISPLAY :1-LINE
DATE /TIME POSITION

MARKED AREA
SUPER
CHARACTER
EXIT

【▲ ▼】SELECT【◀ ▶】CHANGE

Menu Item	Description			Ref.
DISPLAY	Selects 1-line or 2-line display.			5-3-1
DATE POSITION	Set the date display position.			4-5
TIME POSITION	Set the time display position.			
MARKED AREA	Set the date/time display area.			
SUPER Menu	SUPER CTRL (*1)	Select LOCAL or REMOTE		5-5
	DISPLAY	Date/time display ON/OFF		5-3-2
	DATE Menu	YEAR	Year display ON/OFF	
		MONTH	Month display ON/OFF	
		DAY	Day display ON/OFF	
		DAY OF WEEK	Day of week display ON/OFF	
	TIME Menu	HOUR	Hour display ON/OFF	
		MINUTE	Minute display ON/OFF	
		SECOND	Second display ON/OFF	
		AM/PM (*2)	AM/PM display ON/OFF	
CHARACTER Menu	CHARACTER	TYPE1: Standard (Black and white) TYPE2: Transparent		
	EDGE	Edge ON/OFF		
	CHAR LV	Brightness level. Ten levels: level 1 to 10.		
	EDGE LV	Edge brightness level. Ten levels: level 1 to 10. (Available only EDGE is set to ON.)		

(*1) This menu is the same as SUPER CTRL in REMOTE menu. The value is linked and changes accordingly.
(*2) This menu is the same as AM/PM display ON/OFF in DISPLAY 2 menu. The value is linked and changes accordingly.

5-3-1. 1-LINE/2-LINE(DISPLAY)

DISPLAY in 【DISPLAY 1】 menu is used to change the date/time display to be appeared on one line or two lines. Move the cursor to DISPLAY using 【▲ ▼】 buttons, and select 1-LINE or 2-LINE using 【◀ ▶】 buttons.

5-3-2. Display ON/OFF

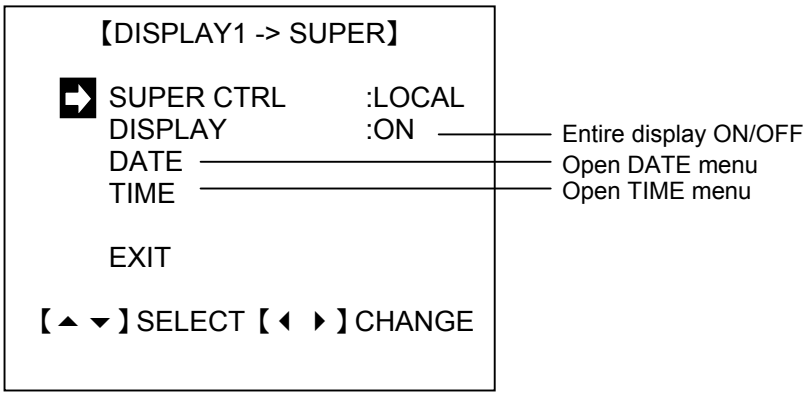

◆ **Entire date/timedisplay ON/OFF**

In DISPLAY, the entire date/time display can be set to ON/OFF together. DISPLAY is set to ON in the factory default setting. If DISPLAY is set to OFF, neither date nor time are displayed regardless of DISPLAY ON/OFF settings. DISPLAY cannot be set when SUPER CTRL is set to REMOTE.

◆ **Year, month, day, day of week, hour, minute, socond display ON/OFF**

Select DATE or TIME in 【DISPLAY1 → SUPER】 menu and press SET button. 【SUPER → DATE】 menu or 【SUPER → TIME】 menu is displayed. Set the parameter value ON/OFF in each menu.

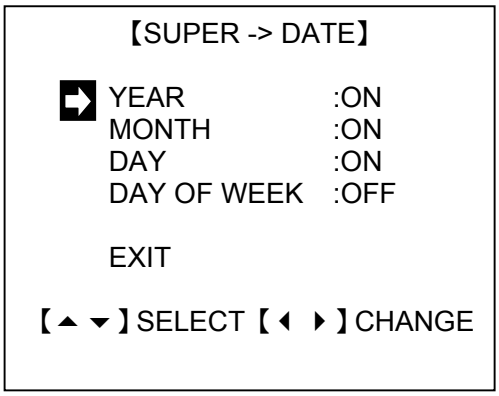

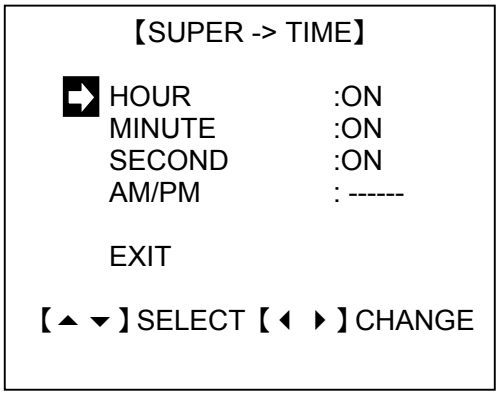

5-4. DISPLAY2

As well as【DISPLAY 1】 menu, 【DISPLAY 2】menu is used to change the display format. See Appendix 2 “Date/Time Display Format” for more details.

```
【DISPLAY2】

➡ DATE FORMAT   :Y-M-D
  YEAR          :YYYY
  MONTH         :01-12
  HOUR          :24H
  AM/PM         :------
  0 SUPPRESS    :OFF
  EXIT

【▲ ▼】SELECT【◀ ▶】CHANGE
```

Menu Item	Description	Setting Range
DATE FORMAT	Date display order	Y-M-D M-D-Y D-M-Y
YEAR	Year display digit	YYYY(4 digits) YY(2 digits)
MONTH	Month display format	01-12(numeric format) JAN-DEC (alphabetic format)
HOUR	Selects 24-hour or 12-hour format.	24H 12H
AM/PM	Turns AM/PM display ON/OFF (available only when HOUR is set to 12H.)	ON OFF
0 (zero) SUPPRESS	Used to set zero suppression (eliminates insignificant zeros) ON/OFF. See Appendix 3 “Zero Suppression Display” for more details.	ON OFF

5-5. REMOTE

【REMOTE】 menu is used to set the remote control settings. When setting up remote control, also refer to the information presented in section 7 “Remote Control.”

```
【REMOTE】

➡ STATUS        :SLAVE
  SUPER CTRL    : LOCAL
  SUPER SENSE   : ------
  ADJUST        : ------
  SERIAL LINK   : OFF

  EXIT

【▲ ▼】SELECT 【◀ ▶】CHANGE
```

Menu Item	Description	Setting Range
STATUS	Master/slave setting	MASTER (*3) SLAVE
SUPER CTRL (*1)	Local/remote control selection (remote control based on parallel signal)	LOCAL REMOTE
SUPER SENSE	Parallel control input signal	LEVEL(level control) TRG(pulse control)
ADJUST	Time correction output interval setting Once per second, once per hour, once per day (available only on MASTER)	1/MIN (at 00 seconds) 1/HOUR (at 00 minutes, 00 seconds) 1/DAT (at 00 hours, 00, minutes, 00 seconds)
SERIAL LINK	Dedicated serial time linked operations ON/OFF during linked operations (*2)	ON (*3) OFF

(*1) This menu is the same as SUPER CTRL in DISPLAY1 → SUPER menu. The value is linked and changes accordingly.
(*2) A serial signal is sent once per second during dedicated serial linked operations.
(*3) When SERIAL LINK is set to ON in the master unit, the master unit outputs correction pulses based on both the dedicated serial signal and the parallel signal.

IMPORTANT

Note the following when using a master/slave connection. If a slave unit has the GPS option and GPS ADJUST and SERIAL LINK from the master unit are both set to ON (enabled), both GPS correction and correction from the master unit will be received. Therefore, only one of these correction signals (GPS correction or correction from the master unit) should be enabled. When linking SUPER ON/OFF, set SUPER SENSE in the slave units to LEVEL.

5-6. GPS (Optional)

If the GPS option is installed, clock updates can be synchronized to UTC (Coordinated Universal Time). For information on installing and using the GPS option, see “3. GPS Option”.

The GPS menu is used to turn GPS ON/OFF, set the time zone, etc. Move the cursor to GPS on the MAIN menu, then press the SET button to go to the GPS menu.

```
【GPS】

➡ ADJUST          :ON
  TIME ZONE       :+09.0H
  RCV MONITOR     :

  EXIT

【▲ ▼】SELECT  【SET】ENTER
```

IMPORTANT
GPS is only displayed on the MAIN MENU if the GPS option has been installed. After the power is turned on, it takes several seconds for the GPS option to be recognized. Therefore, if you enter the menu immediately after turning the power on, GPS may not be displayed for a short period of time.

Menu Item	Description		Setting range
ADJUST	Turns GPS time correction function ON/OFF		ON OFF
TIME ZONE	Sets time zone relative to GPS time. Default setting: +09.0H (Japan Standard Time)		-12.0H to +12.0H 0.5h internals(30-minute intervals)
*RCV MONITOR menu (display only)	STATUS	Reception status display	NO CONNECTION NOT RECEIVED RECEIVED
	SATELLITE	Number of received satellites	—
	CONDITION	Reception level	—
	(PEAK)	Peak reception level (the value can be initialized on the menu)	—

For information on the RCV MONITOR menu, see section 5-6-1 “Reception Status/Signal Strength Display (for antenna installation).”

IMPORTANT
Note the following when using a master/slave connection. If a slave unit has the GPS option and GPS ADJUST and SERIAL LINK from the master unit are both set to ON (enabled), both GPS correction and correction from the master unit will be received. Therefore, only one of these correction signals (GPS correction or correction from the master unit) should be enabled.

5-6-1. Reception Status/Signal Strength Display (for antenna installation)

This display is used to monitor reception status in order to install an antenna in a location with good reception. Move the cursor to RCV MONITOR and press the SET button to go to the menu shown below on the right.

```
【GPS】

  ADJUST        :ON
  TIME ZONE     :+09.0H
➡ RCV MONITOR   :


  EXIT

【▲ ▼】SELECT 【◀ ▶】ENTER
```

```
【GPS → RCV MONITOR】

  STATUS        :RECEIVED

  SATELLITE     :04
  CONDITION     :320
      (PEAK)    :350


【▲】PEAK CLR 【SET】RETURN
```

The following information is displayed on the reception status screen.

STATUS	NO CONNECTION	Antenna is not connected.
	NOT RECEIVED	No signal reception.
	RECEIVED	Signal is being received.
SATELLITE	(2-digit display)	Displays the current number of received satellites.
CONDITION	000 - 099	“Out of area” to “Unstable reception level”
	100 - 150	“Weak receivable level”
	151 - 299	“Normal receivable level”
	300 -	“Good receivable level”

IMPORTANT

If a GPS signal cannot be received, the time setting switches to the VTG-15’s internal RTC time.

As a rule of thumb, “NOT RECEIVED” status refers to a condition where there are three or fewer connected satellites. In “RECEIVED” status, there are four or more satellites. When GPS is operating properly, the ADJUST LED on the front panel stays on.

6. MEMORY CLEAR, NTSC/PAL

The text data and display format settings can be initialized to the default settings. Follow the procedures below.

■ **MEMORY CLEAR (Initialize)**

1) Hold down the SET button on the VTG-15 front panel and turn on the power of the VTG-15.

2) 【BASIC SETUP】 menu is displayed.

IMPORTANT
Keep holding the SET button down until 【BASIC SETUP】 menu is displayed. Although MEMORY CLEAR is performed and the settings are initialized, the time and start/stop status remains the same. See Appendix 1 “Menu List” for more details about the factory default settings.

3) Move the cursor to MEMORY CLEAR using 【▲ ▼】 buttons. Press SET button to display 【MEMORY CLEAR】.

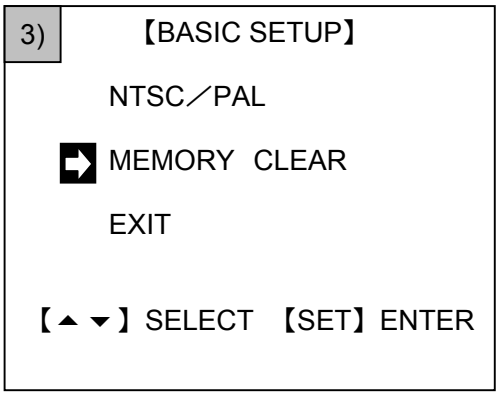

4) Move the cursor to OK using【▲ ▼】buttons. Press SET button to perform MEMORY CLEAR. See Appendix 1 “Menu List” for more details about the factory default settings.

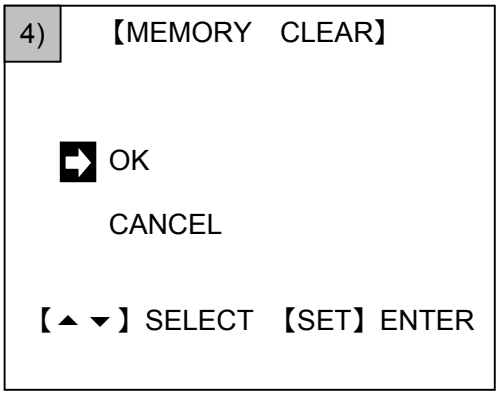

After the initialization, 【BASIC SETUP】 menu is displayed. To return to the normal display, move the cursor to EXIT in 【BASIC SETUP】 menu and press SET button.

■ Switching between NTSC and PAL

1) Hold down the SET button on the VTG-15 front panel and turn on the power of the VTG-15.

2) 【BASIC SETUP】menu is displayed.

3) Move the cursor to NTSC/PAL using【▲▼】buttons. Press SET button to display【NTSC/PAL】.

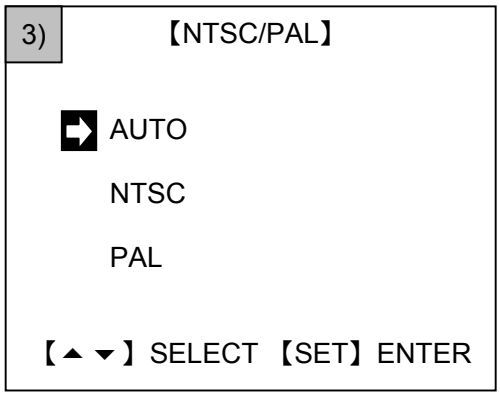

4) Select AUTO, NTSC, or PAL using 【▲▼】buttons. Press SET button to apply the setting.

AUTO	Detects the input video signal and automatically recognize NTSC or PAL.
NTSC	Always operates in NTSC irrespective of the input signal format.
PAL	Always operates in PAL irrespective of the input signal format.

【BASIC SETUP】menu is displayed. To return to the normal display, move the cursor to EXIT in【BASIC SETUP】menu and press SET button.

7. Remote Control

7-1. REMOTE Connector Pin Assignment

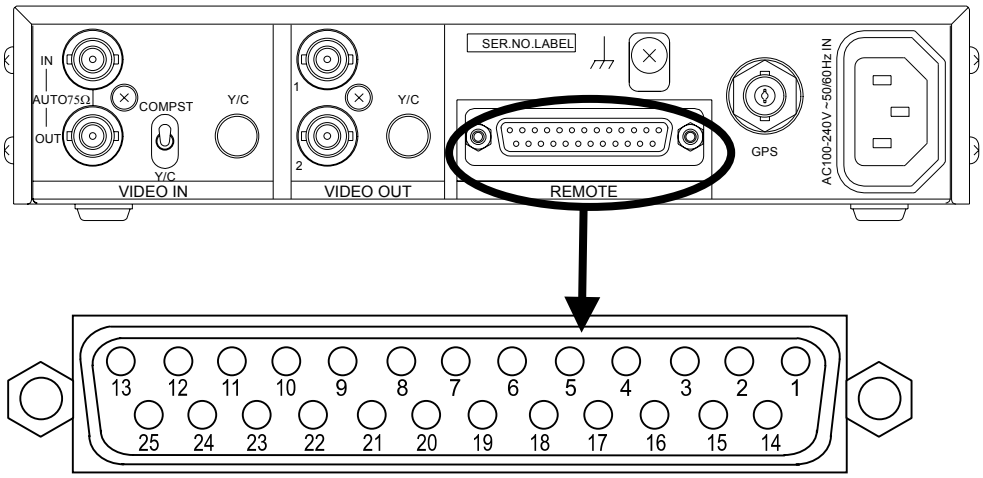

REMOTE

Connector (male):	DB-25PF-N (JAE)
Cover:	DB-C4-J11-S1 (JAE)
*Use the inch screw threads.	

REMOTE connector pin assignments (25-pin D-sub female)

Pin No.	Function	Pin No.	Function
1	+5V	14	DATA+
2	ADJ_IN(TTL)	15	DATA+
3	SUPER_IN	16	DATA-
4	START_IN	17	DATA-
5	STOP_IN	18	TERM_A
6	ADJ_IN (photocoupler)	19	TERM_B
7	+COM (photocoupler)	20	RESERVE1
8	ADJ_OUT	21	RESERVE2
9	SUPER_OUT	22	RESERVE3
10	START_OUT	23	RESERVE4
11	STOP_OUT	24	RESERVE5
12	NC	25	GND
13	GND		

7-2. Remote Control Settings

Pin No.	Function	Description
1	+5V	+5V output, maximum 200mA supply possible
2	ADJ_IN (TTL)	Time correction input TTL level
3	SUPER_IN	SUPER linked input Level input or pulse input
4	START_IN	START linked input Pulse input
5	STOP_IN	STOP linked input Pulse input
6	ADJ_IN (photocoupler)	Time correction input
7	+COM (photocoupler)	Time correction input voltage DC+12V to +24V
8	ADJ_OUT	Time correction output Open collector output, maximum 40mA
9	SUPER_OUT	SUPER linked output Open collector output, maximum 40mA
10	START_OUT	START linked output Open collector output, maximum 40mA
11	STOP_OUT	STOP linked output Open collector output Maximum 40mA
12	NC	Do not connect.
13	GND	Signal ground
14	DATA+	Serial control for linking DATA+
15	DATA+	Serial control for linking DATA+
16	DATA-	Serial control for linking DATA-
17	DATA-	Serial control for linking DATA-
18	TERM_A	Serial control for linking Termination A
19	TERM_B	Serial control for linking Termination B
20 to 24	RESERVE1 to 5	Spare pins. Do not connect.
25	GND	GND

IMPORTANT
The input signal pulse width is 100ms or more.

- +5V
  Power supply usable by remote control BOX, etc. Can supply power up to 200mA.

- ADJ_IN (external time correction input)
  The time is corrected as follows when an external pulse signal falls.

  Example 1: Seconds display of 1 second to 29 seconds → Seconds display corrected to 0 seconds
  Example 2: Seconds display of 30 seconds to 59 seconds → Seconds display corrected to 0 seconds and minutes value increased by 1

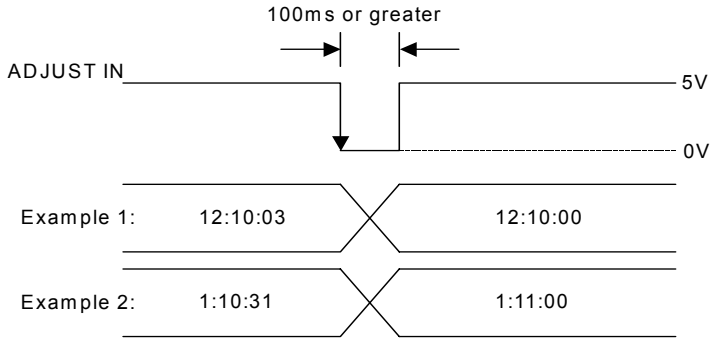

IMPORTANT
Allow an input pulse interval of at least one second.

- SUPER IN
  Set under SUPER SENSE on the REMOTE menu. Pulse reception or level reception can be selected on the menu.

LEVEL	The display is turned on by TTL level negative logic or make-contact pulse.
TRG	The display is toggled ON/OFF by each TTL level negative logic or make-contact pulse.

In this case, a pulse width of 100ms or more is required.

＜Input signal: Using level＞

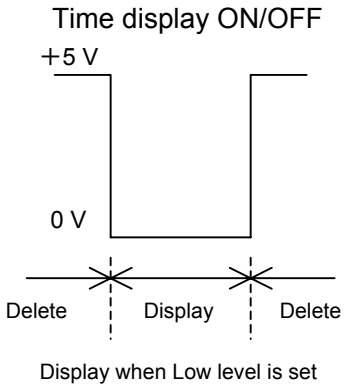

＜Input signal: Using trigger＞

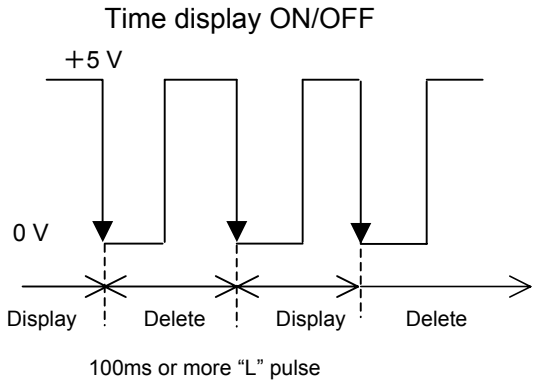

IMPORTANT
SUPER CTRL on the menu must be set to REMOTE in order to turn the display ON/OFF remotely. In such cases, if remote SUPER_IN is in the open state (e.g., if the remote connector is not connected), the display will be turned off because the power will be pulled up to +5V internally (in the VTG-15). (See section 7-2 “Remote Control Settings.”) Allow an input pulse interval of at least 100ms.

- START_IN, STOP_IN
  The clock can be started or stopped by TTL level negative logic or make-contact pulse. In these cases, a pulse width of at least 100ms is required.

  Time correction, start/stop

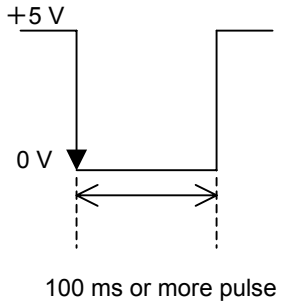

IMPORTANT
If START and STOP pulses are input simultaneously, both will be ignored internally. Allow an interval of at least 100ms between each input.

- ADJ_IN (photocoupler), +COM (photocoupler)
  The operations are the same as for ADJ_IN. Operations are possible using DC+12V to +24V.

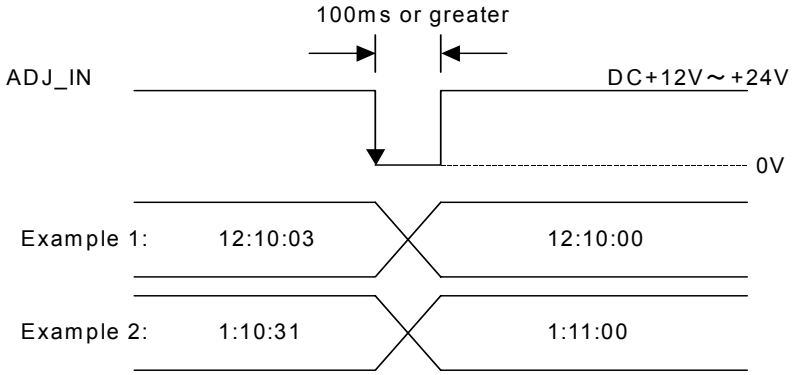

IMPORTANT
Allow an input pulse interval of at least one second.

- ADJ_OUT, SUPER_OUT, START_OUT, STOP_OUT

ADJ_OUT :	Correction pulse output (approximately 500ms width), for master/slave linking
SUPER_OUT :	Super level output
START_OUT :	Start level output, for master/slave linking
STOP_OUT	Stop level output, for master/slave linking

Open collector output is used on all four systems. This is equivalent to 74LS06 and ability to control a total maximum load current of 40mA. Use for purposes such as driving an external remote tally LED.

- DATA+、DATA-
  VTG-15 dedicated serial linkage ports.
  These pins can be used to link VTG-15 units together in a master/slave configuration using dedicated serial signals.

- TERM A, TERM B
  Direct connection of TERM A and TERM B terminates the signal and prevents the signal reflections. In a configuration where VTG-15 units are linked using VTG-15 dedicated serial linking, the signal must be terminated at the final slave unit in the connection.

- RESERVE1 to 5
  These pins are spare pins. They cannot be used, so do not connect them to anything.

  An example of pin connections for connecting to a remote control BOX or other equipment is shown below.

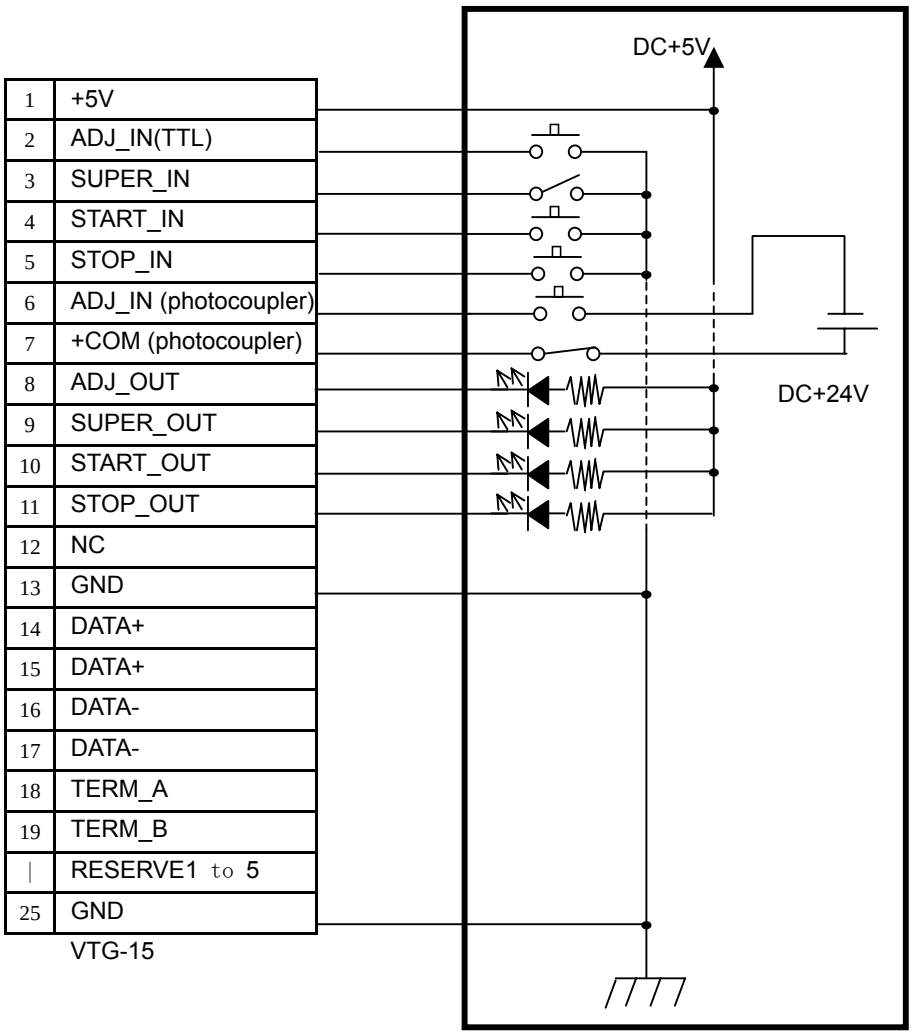

7-2-1. Master/Slave Time Correction/Time Linking Operations

It is possible to link together multiple VTG-15 units, and to synchronize their clock updating operations and date/time display ON/OFF operations to a single master VTG-15 unit (master/slave function).

There are four different clock updating functions:

1. Clock updating based on the crystal oscillator
2. Clock correction by external correction pulse (master/slave) and clock updating by the crystal oscillator
3. Clock linking using dedicated serial connection (master/slave)
4. Clock linking using GPS (optional)

The following table summarizes these functions.

No.	Time error (monthly error)	Correction/ linking timing	Other linked functions	Advantages	Disadvantages
1	±10 sec (0℃ -40℃)	–	–	–	Maximum yearly error of 120 seconds
2	Depends on time error of master VTG-15 master time ±10 seconds (at 0°C to 40°C)	1/min (correction) 1/hour (correction) 1/day (correction)	START STOP SUPER	Makes it easy to configure a system remotely.	If the master unit has a time error, the slave units will also have time errors.
3	Depends on time error of master VTG-15 master time ±10 seconds (at 0°C to 40°C)	1/sec (linking)	Clock only	Makes it easy to configure a system remotely. Can also be used in a wide area system even with a small number of slaves (maximum distance of 100 meters for master and 2 slaves).	If the master unit has a time error, the slave units will also have time errors.
4	±0sec (synchronized with UTC)	1/sec (linking)	Clock only	Synchronization with UTC ensures accurate clock settings. In addition, if one unit has the GPS option, other slaves can be linked to it.	Signal reception varies significantly depending on where the antenna is installed.

7-2-2. Remote Linking

If multiple VTG-15 units are connected, the slave clocks can be corrected by the master unit. In addition, the operations of the slave units can be linked to the start/stop operation of the master unit. As many as ten slave units can be controlled by a single master unit.
As a rule of thumb, assume that the maximum distance between connected units is 10 meters (if the cables equivalent to AWG26 are used).

＜Connection＞

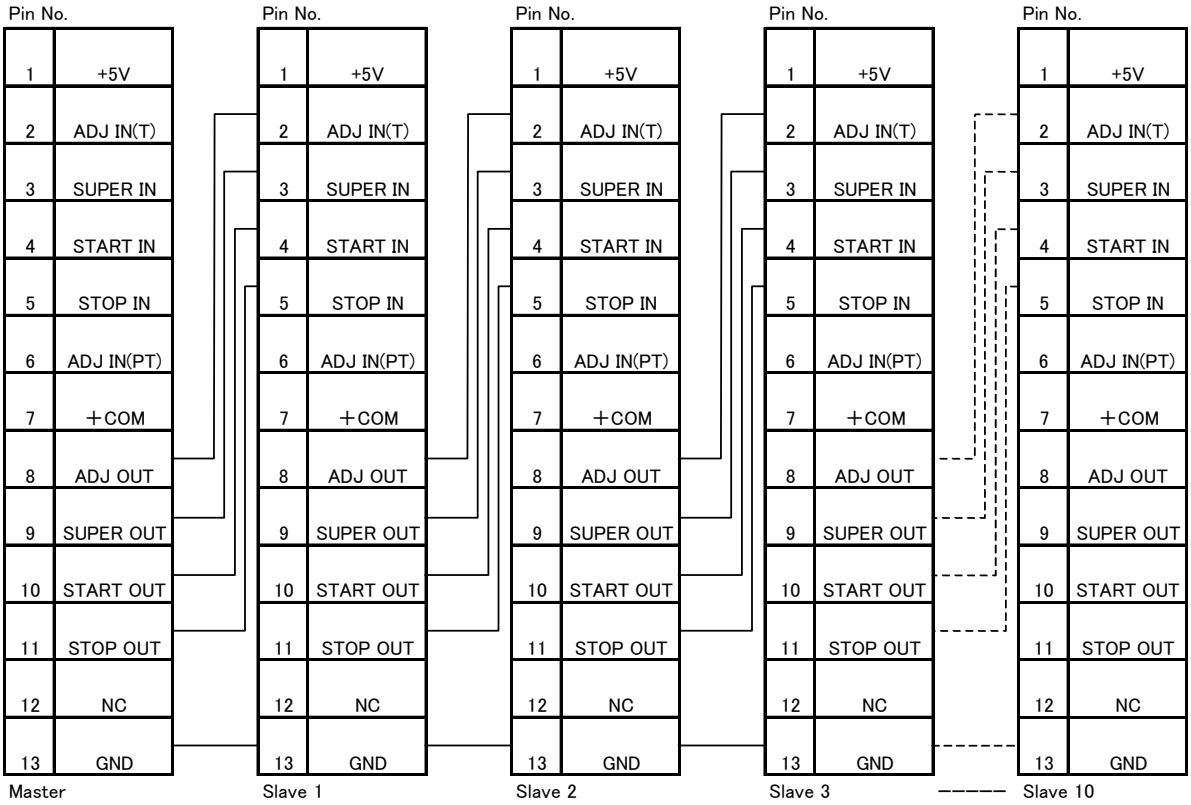

IMPORTANT
The START OUT and STOP OUT outputs from the Master units are level triggered signals. (START OUT and STOP OUT are output in LOW state.) On the other hand, in the slave units, START OUT or STOP OUT is triggered to output in the same level as the START IN or STOP IN signal. To link SUPER ON/OFF, in the slave units, set SUPER CTRL on the REMOTE menu to REMOTE, and set SUPER SENSE to LEVEL.

7-2-3. Connecting with the Dedicated Serial

If multiple VTG-15 units are connected based on the dedicated serial connection, the slave clocks can be corrected by the master unit. As many as ten slave units can be controlled by a single master unit.

As a rule of thumb, assume that the maximum distance between connected units or the maximum cable length for the whole system is 100 meters (twisted-pair cable equivalent to AWG 26). The operations of the slave units cannot be linked to the start/stop operation of the master unit.

＜Connection＞

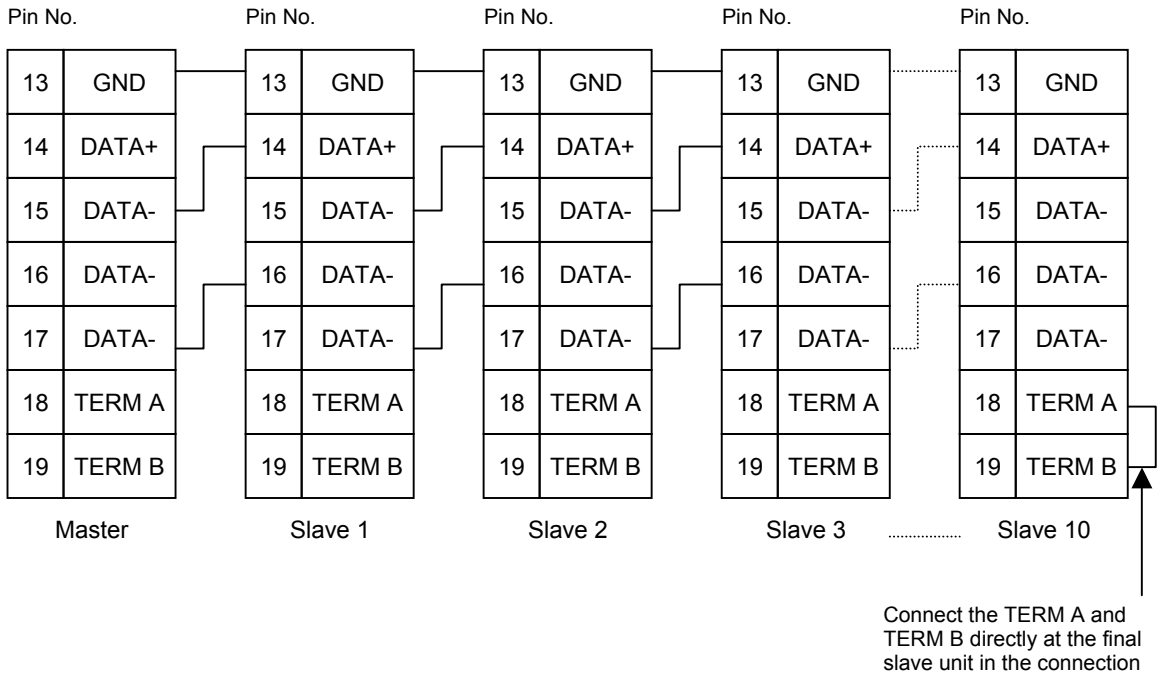

7-3. Remote Input Circuit

(Input terminal: TTL)

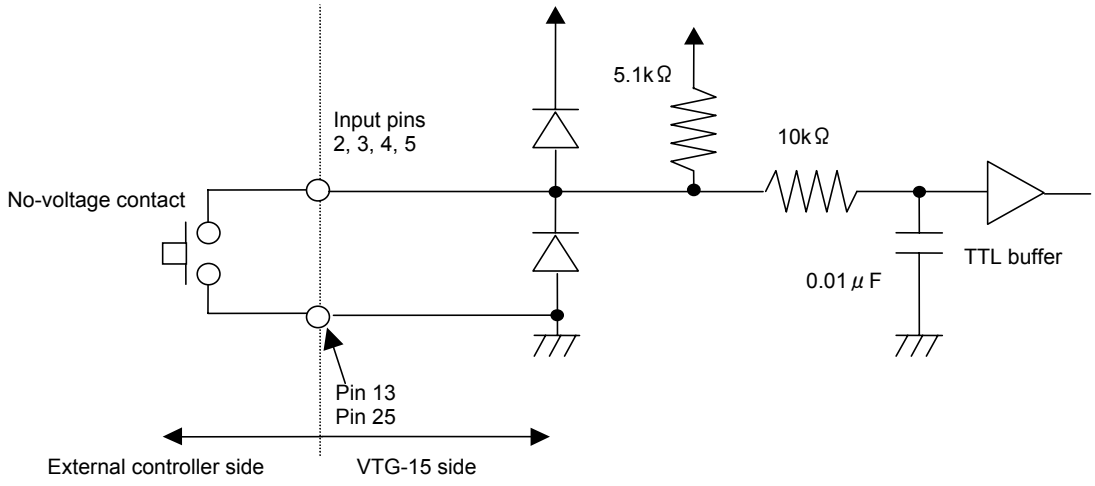

(Input terminal: photocoupler)

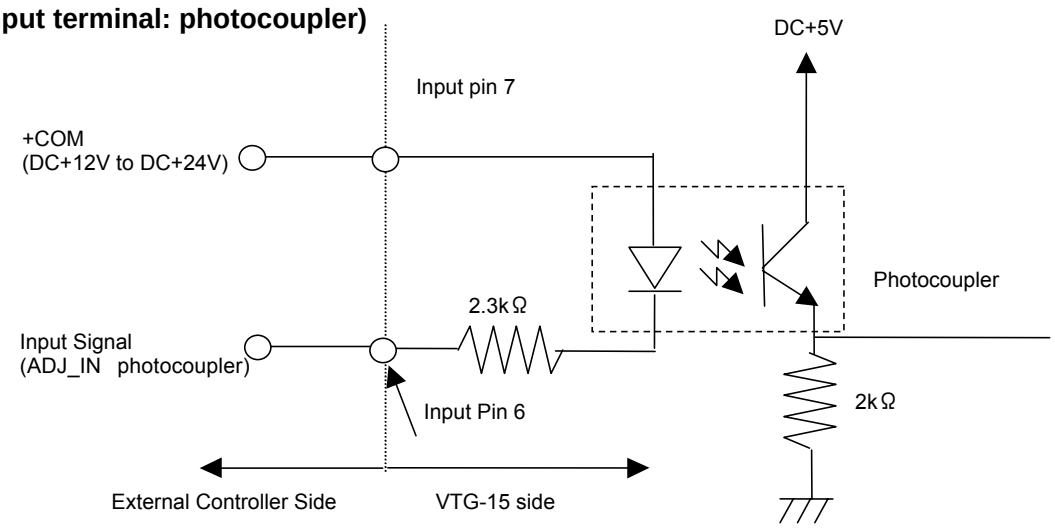

(Output terminal)

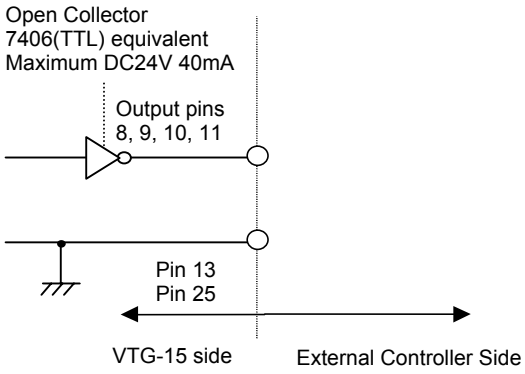

8. GPS Option

When the optional VTG-15GPS is installed, clock updates can be synchronized to UTC (Coordinated Universal Time).

IMPORTANT
GPS (Global Positioning System) is a positioning system developed, managed, and operated by the United States government. The positioning precision assured by GPS can decline significantly, depending on the operating conditions. The information presented in this operating manual, including the above, does not constitute a guarantee of precision. When the receiver receives time information (GPS Week Number and GPS Seconds) broadcast from a GPS satellite, it automatically converts this information to the date and time output by the receiver. This automatic conversion process covers the time period from May 19, 2002 to January 1, 2022. If the clock is set to May 18, 2002 or earlier, or is set to January 2, 2002 or later, the set time will be displayed prior to receiving GPS time information. However, after the GPS time information is received, the clock will be changed to a time in the range of May 19, 2002 to January 1, 2022. If you want to add the GPS option after purchasing the VTG-15, send the VTG-15 unit back to us to have the GPS option installed.

8-1. GPS Antenna Cable Length and Antenna Installation Example

The supplied GPS antenna (with 5-meter cable) is used for GPS-based time correction. However, the supplied cable may not be long enough to reach the VTG-15 unit location from the antenna. In such cases, refer to the following table and select a cable with 50 Ω impedance in order to extend the cable to the antenna.

Cable No.	Maximum Cable Length
3D-2V	10m
5D-2V	25m
8D-2V	40m
5D-FB	50m
8D-FB	75m
10D-FB	100m

An example antenna installation is shown below.
It is recommended that the antenna be installed outside.

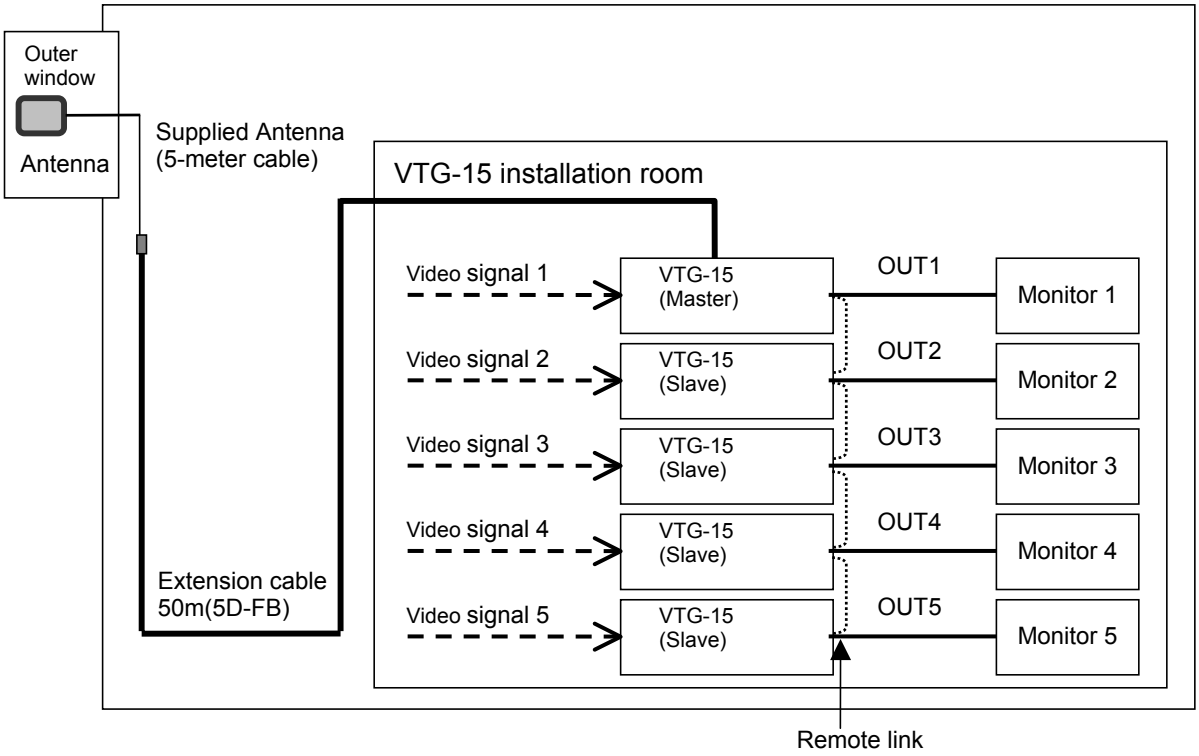

8-2. Notes on GPS Antenna Installation

The GPS receiver may not work properly even in environments where ordinary FM radios work properly. Check the following to troubleshoot installation problems.

Problem	Possible primary cause	Possible secondary cause	Ref.
Unable to receive signal	Antenna installation environment	Too many obstructions	8-2-1
		Metal objects around the antenna	8-2-2
	Noise around antenna	Radio transmitters or other radiowave-emitting equipment around the antenna	8-2-3
	Noise around GPS receiver	GPS receiver installed near noise-generating equipment	8-2-4

8-2-1. Too Many Obstructions Around Antenna

The 1575.42MHz signal used by the GPS system is highly linear, so if there are obstructions between the GPS receiver antenna and the GPS satellite, it may not be possible to properly capture and track the satellite signal. Note that buildings and other structures, and even people can obstruct GPS signal reception. The degree of obstruction varies depending on the usage environment. Satellite signals lacking line of sight from the antenna should be considered obstructed.

8-2-2. Metal Objects Around the Antenna

Metal objects near the GPS antenna can prevent reception because they change the antenna's impedance and directional characteristics. In particular, metal objects above the antenna (in the direction of the satellite) can significantly impair reception capability. Conversely, metal objects beneath the antenna (on the mounting surface) can be beneficial, by stabilizing the antenna's grounding and improving its gain.

8-2-3. Radio Transmitters or Other Radiowave-Emitting Equipment Around the Antenna

If an application involves the simultaneous use of a GPS receiver and radio transmitter, transmission from the radio transmitter can impede GPS signal reception. The spread spectrum communication system used by GPS was initially developed as a military technology, and is generally very robust with respect to radio interference. However, because the GPS signal is weak, any noise components mixed into the frequency band can reduce receptivity and in some cases make reception impossible.

8-2-4. GPS Receiver Installed Near Noise-Generating Equipment

The GPS signal strength obtained at the input end of the GPS receiver is about -130dBm. This is a very weak signal with strength no more than 1/1000 (-30dB) the limit reception strength of ordinary cellular telephones. The spread spectrum communication system used by GPS was initially developed as a military technology, and is generally very robust with respect to radio interference. However, because the GPS signal is weak, any noise components mixed into the frequency band can reduce receptivity and in some cases make reception impossible.

9. If Problems Occur

Problem	Check	Action
COMPOSITE video signal is not output.	Is the COMPST⇔Y/C toggle switch on the rear panel set to COMPST?	COMPOSITE video signal cannot be output in the Y/C setting. Set the switch to COMPST.
The clock has stopped.	The remote cable might be connected. START/STOP might be set to STOP.	If the remote cable is connected, the stop pulse might be input. Try to input the start pulse (pin 4). Display the STAR/STOP menu and press START【▶】button.
The GPS menu is not displayed.	Was the GPS menu displayed before?	The GPS receiver might be broken. Contact your supplier immediately.
The date/time display moves when the power is turned on.	At startup, is the “BACKUP ERROR TIME RESET” message shown on the monitor?	The battery might have run out. Contact your supplier for replacing the battery.

10. Specifications and Dimensions

10-1. Unit Specifications

TV Standard		NTSC or PAL(switched in the menu)
Video Inputs		
Analog Composite		1.0V(p-p), Color or B/W
		75Ω, BNC (loopthru, automatic termimation) 1 input
Y/C	Y :	1.0V(p-p) 75Ω
	C :	0.286 V(p-p) (burst), 75Ω (NTSC)
		0.3 V(p-p)(burst), 75Ω (PAL)
		75Ω 4-pin S-connector 1 input

* Analog composite or Y/C can be selected by the toggle switch on the rear panel.

Video Outputs		
Analog Composite		1.0V(p-p), 75Ω, BNC, 2 output
Y/C	Y :	1.0V(p-p)
	C :	0.286 V(p-p) (burst), 75Ω (NTSC)
		0.3 V(p-p) (burst), 75Ω (PAL)
		75Ω 4-pin S-connector 1 output

* Either Analog composite or Y/C selected by the toggle switch on the rear panel is output.

Characters	
Basic display	YYYY-MM-DD HH:MM:SS (24-hour display) YYYY-MM-DD HH:MM:SS AM (12-hour display) YYYY-MM-DD (DAY OF WEEK)HH:MM:SS
Display controls	Can be changed in the order Year, Month, Day (three formats: Year Month Day; Month Day Year; Day Month, Year) The Year display can be set to 4-digit or 2-digit display (e.g., 2004 or 04). The Month display can be set to 2-digit or 3-leter display (e.g., 12 or DEC). The clock can be set to 12-hour or 24-hour display (if 12-hour display is selected, AM/PM display can be turned ON/OFF). The display can be set as either 1-line or 2-line display. For each of these line modes, the individual fields (Year, Month, Day, Hour, Minute, Second) can be turned ON/OFF. The entire date and time display can be turned ON/OFF. Edges can be turned ON/OFF.
Display position	The screen can be moved about 90% in both the vertical and horizontal directions.
Character/edge brightness	Can be varied among brightness 10 levels.
Font	Font size V : 16H/field, H : approximately 1.8μs Format: 24x16 dots
Clock precision	±10 seconds per month for internal crystal oscillator (at 0°C to 40°C)

Time correction input	Correction based on correction pulse from remote connector(can be turned ON/OFF) Correction based on GPS signal (optional) (can be turned ON/OFF) * Time zone can be set relative to GPS world standard time (±12 hours)
Time correction output	Correction timing can be set (once per day, hourly correction or correction every minute selectable)
Master/Slave	Multiple units can be linked together in a master/slave configuration. * As many as ten slave units can be corrected by a single master unit.
Interfaces	
REMOTE Connector	15-pin D-sub connector, female
Remote Input	TTL negative logic pulse or make-contact pulse, pulse width of 100ms or more (START, STOP, SUPER)
Remote Output	TTL negative logic (level output) (SUPER OUT, START OUT, STOP OUT)
Time correction input	TTL negative logic pulse (pulse width of 100ms or more), 1 system DC+12V to +24V signal (photocoupler isolation), 1 system
Time correction output	TTL negative logic pulse (pulse width of approximately 500ms), 1 system
Dedicated serial I/O for linking	1 system
GPS Input (Option)	BNC 1 input(For connecting antenna.)

Temperature	0°C - 40°C
Humidity	30% - 90% (no condemsation)
Power	100VAC-240VAC±10%, 50/60Hz
Consumption	Approx. 8.9VA (5.0W) at 100VAC Approx.13.3VA (6.9W) at 240VAC
Backup power supply	Internal lithium battery(For retaining time data.) * EEPROM is used for retaining internal settings.
Weight	Approx. 2.1 kg (When GPS option is installed.)
Dimensions	212 (W) x 44 (H) x 350 (D) mm, EIA 1RU

10-2. External Dimensions

(All dimensions in mm.)

◆ One-unit configuration

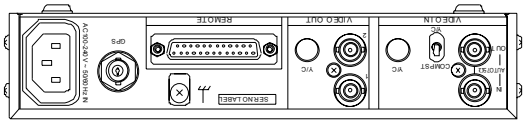

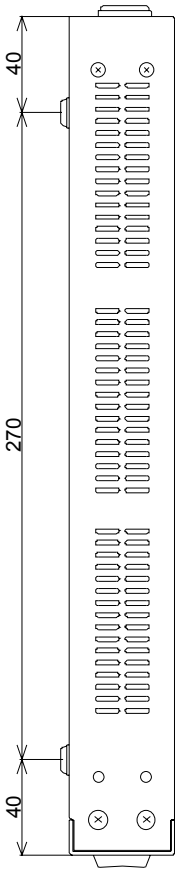

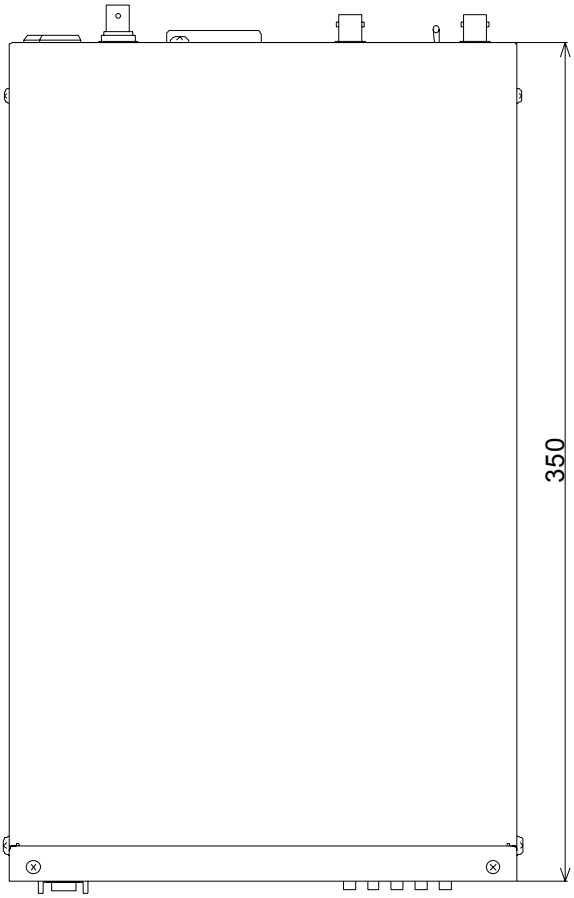

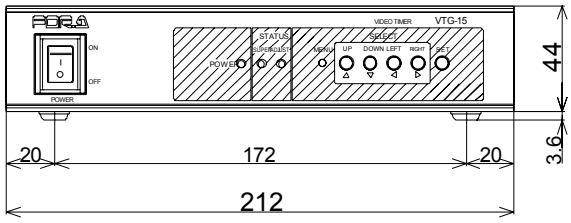

◆ Two-unit configuration

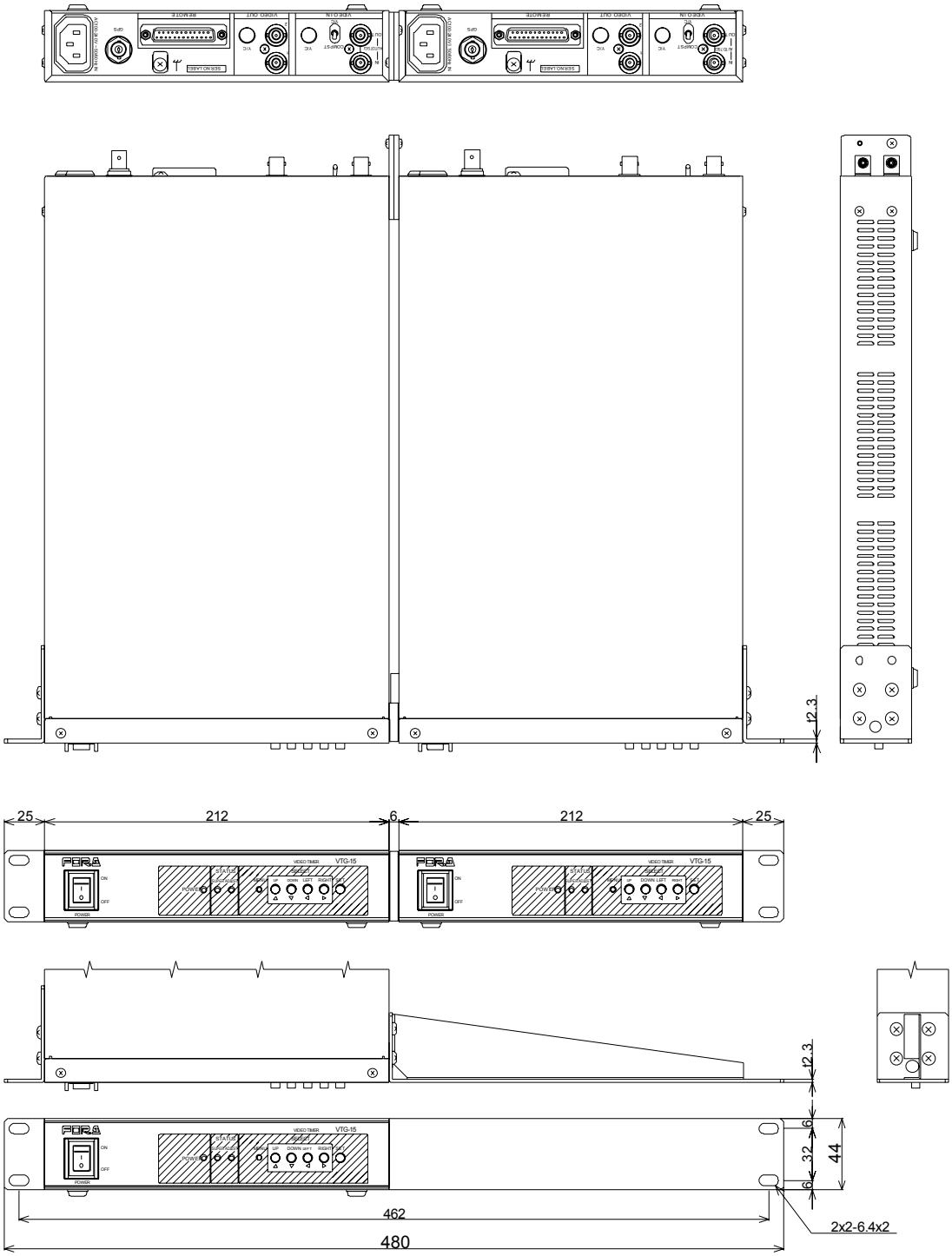

Appendix 1. Menu List

Menu Item				Parameter Value	Default	Remote	Ref
TIME	DATE/TIME			(The date/time is displayed.)	—	ADJUST START/STOP	12
	START/STOP				—	✓	P17
DISPLAY1	DISPLAY			1-LINE 2-LINE	1-LINE		P18
	DATE/TIME POSITION (When DISPLAY is set to 1-LINE)			—	Monitor area: 90% of the upper center area		P14
	MARKED AREA			—			
	SUPER	SUPER CTRL		LOCAL REMOTE	LOCAL		P16
		DISPLAY		ON, OFF	ON	✓	P9 P19
		DATE	YEAR	ON, OFF	ON		
			MONTH	ON, OFF	ON		
			DAY	ON, OFF	ON		
			DAY OF WEEK	ON, OFF	OFF		
		TIME	HOUR	ON, OFF	ON		
			MINUTE	ON, OFF	ON		
			SECOND	ON, OFF	ON		
			AM/PM (When HOUR is set to 12H)	ON, OFF	ON		
	CHARACTER	CHARACTER		TYPE1 (-1) TYPE2 (-2)	TYPE1		P18
		EDGE		ON, OFF	ON		
		CHAR LV		01-10	10		
		EDGE LV (When HOUR is set to 12H)		01-10	01		
DISPLAY2	DATE FORMAT			Y-M-D M-D-Y D-M-Y	Y-M-D		P9 P20
	YEAR			YYYY YY	YYYY		
	MONTH			01-12 JAN-DEC	01-12		
	HOUR			24H 12H	24H		
	AM/PM (When HOUR is set to 12H)			ON, OFF	ON		
	0 SUPPRESS			ON, OFF	OFF		
REMOTE	STATUS			MASTER SLAVE	SLAVE		P16 P21 P25
	SUPER CTRL			LOCAL REMOTE	LOCAL		
	SUPER SENSE (Fixed to LEVEL when STATUS is set to SLAVE)			LEVEL TRIGGER	LEVEL		
	ADJUST (Available only when STATUS is set to MASTER.)			1/MIN 1/HOUR 1/DAY	1/MIN		
	SERIAL LINK			ON, OFF	OFF		
GPS	ADJUST			ON, OFF	OFF		P22
	TIME ZONE (ADJUST ON 時)			-12.0H ~ +12.0H	+09.0H		
	RCV MONITOR			Display only			

Appendix 2. Date/Time Display Format

Menu Item				Parameter Value	Display
DISPLAY1	DISPLAY			1-LINE	2004-11-22 09:34:56
				2-LINE	2004-11-22 09:34:56
	SUPER	DISPLAY		ON	2004-11-22 09:34:56
				OFF	(No display)
		DATE	YEAR	ON	2004-11-22 09:34:56
				OFF	11-22 09:34:56
			MONTH	ON	2004-11-22 09:34:56
				OFF	2004 22 09:34:56
			DAY	ON	2004-11-22 09:34:56
				OFF	2004-11 09:34:56
			DAY OF WEEK	ON	2004-11-22 (MON) 09:34:56
				OFF	2004-11-22 09:34:56
		TIME	HOUR	ON	2004-11-22 09:34:56
				OFF	2004-11-22 34:56
			MINUTE	ON	2004-11-22 09:34:56
				OFF	2004-11-22 09 56
			SECOND	ON	2004-11-22 09:34:56
				OFF	2004-11-22 09:34
			AM/PM	ON	2004-11-22 09:34:56 PM
				OFF	2004-11-22 09:34:56
DISPLAY2			DATE FORMAT	Y-M-D	2004-11-22 09:34:56
				M-D-Y	11-22-2004 09:34:56
				D-M-Y	22-11-2004 09:34:56
			YEAR	YYYY	2004-11-22 09:34:56
				YY	04-11-22 09:34:56
			MONTH	01-12	2004-11-22 09:34:56
				JAN-DEC	2004-NOV-22 09:34:56
			HOUR (AM/PM is set to OFF)	24H	2004-11-22 21:34:56
				12H	2004-11-22 09:34:56
			AM/PM	ON	2004-11-22 09:34:56 PM
				OFF	2004-11-22 09:34:56
			0 SUPPRESS	ON	2004-11-22 9:34:56
				OFF	2004-11-22 09:34:56

Appendix 3. Zero Suppression Display

0 SUPPRESS OFF	0 SUPPRESS ON	Description
Normal Mode		
2004-01-02	2004-1-2	4-digit year display is not suppressed.
04-01-02	04-1-2	2-digit year display is not suppressed.
2004-01-02 03:04:05	2004-1-2 3:04:05	Suppresses the first zeros of the month, and day, and hour display. The first zeros of the minute and second display are not suppressed.
00:00:05	0:00:05	Suppresses the first zeros when hour, minute, and second display only are displayed (hour /minute, minute/second, hour, minute, second).
00:05	0:05	
05	5	

Warning

This equipment has been tested and found to comply with the limits for a Class A digital device, pursuant to Part 15 of FCC Rules. These limits are designed to provide reasonable protection against harmful interference when the equipment is operated in a commercial environment. This equipment generates, uses, and can radiate radio frequency energy and, if not installed and used in accordance with the instruction manual, may cause harmful interference to radio communications. Operation of this equipment in a residential area is likely to cause harmful interference, in which case the user will be required to correct the interference at his own expense.

09/29/2009 Printed in Japan

FOR-A COMPANY LIMITED

Head Office : 3-8-1 Ebisu, Shibuya-ku, Tokyo 150-0013, Japan
Overseas Division Phone: +81 (0)3-3446-3936, Fax: +81 (0)3-3446-1470
Japan Branch Offices : Osaka/Okinawa/Fukuoka/Hiroshima/Nagoya/Sendai/Sapporo
R&D/Production : Sakura Center/Sapporo Center

FOR-A America Corporate Office

11125 Knott Ave., Suite #A, Cypress, CA 90630, USA
Phone: +1 714-894-3311 Fax: +1 714-894-5399

FOR-A America East Coast Office

Two Executive Drive, Suite 670, Fort Lee Executive Park, Fort Lee NJ 07024, USA
Phone: +1 (201) 944-1120 Fax : +1 (201) 944-1132

FOR-A America Distribution & Service Center

2400 N.E. Waldo Road, Gainesville, FL 32609, USA
Phone: +1 352-371-1505 Fax: +1 352-378-5320

FOR-A Corporation of Canada

346A Queen Street West, Toronto, Ontario M5V 2A2, Canada
Phone: +1 416-977-0343 Fax: +1 416-977-0657

FOR-A Latin America & the Caribbean

5200 Blue lagoon Drive,
Suite 760, Miami, FL 33126, USA
Phone: +1-305-931-1700 Fax: +1-305-264-7890

FOR-A UK Limited

UNIT C71, Barwell Business Park, Leatherhead Road, Chessington Surrey, KT9 2NY, UK
Phone: +44 (0)20-8391-7979 Fax: +44 (0)20-8391-7978

FOR-A Italia S.r.l.

Viale Europa 50 20093, Cologno Monzese (MI), Milan, Italy
Phone: +39 02-254-3635/6 Fax: +39 02-254-0477

FOR-A Corporation of Korea

801 Dangsan Bld., 53-1 Dangsan-Dong, Youngdeungpo-Gu, Seoul 150-800, Korea
Phone: +82 (0)2-2637-0761 Fax: +82 (0)2-2637-0760

FOR-A China Limited

708B Huateng Building, No. 302, 3 District, Jinsong, Chaoyang, Beijing 100021, China
Phone: +86 (0)10-8721-6023 Fax: +86 (0)10-8721-6033

*The contents of this manual are subject to change without notice.