FOR.A®
INNOVATIONS IN VIDEO
and AUDIO TECHNOLOGY

OPERATION MANUAL

UFM-30FS
UFM-30FS-R
UFM-30FS-DA

Frame Synchronizer

4th Edition

(UFM-30FS/FS-R: CPU Ver. 4.00 – higher)

(UFM-30FS-DA: CPU Ver. 3.56 – higher)

FOR-A COMPANY LIMITED

Precautions

Important Safety Warnings

[Power]

Stop	**Do not** place or drop heavy or sharp-edged objects on power cord. A damaged cord can cause fire or electrical shock hazards. Regularly check power cord for excessive wear or damage to avoid possible fire / electrical hazards.

[Circuitry Access]

Stop	**Do not** touch any parts / circuitry with a high heat factor. Capacitors can retain enough electric charge to cause mild to serious shock, even after power is disconnected. Capacitors associated with the power supply are especially hazardous. Avoid contact with any capacitors.
Hazard	Unit **should not** be operated or stored with cover, panels, and / or casing removed. Operating unit with circuitry exposed could result in electric shock / fire hazards or unit malfunction.

[Potential Hazards]

Caution	If abnormal smells or noises are noticed coming from the unit, turn power off immediately and disconnect power cord to avoid potentially hazardous conditions. If problems similar to above occur, contact authorized service representative **before** attempting to again operate unit.

[Consumables]

Caution	The consumables used in unit must be replaced periodically. For further details on which parts are consumables and when they should be replaced, refer to the specifications at the end of the Operation Manual. Since the service life of the consumables varies greatly depending on the environment in which they are used, they should be replaced at an early date. For details on replacing the consumables, contact your dealer.

Upon Receipt

Unpacking

UFM-30FS/UFM-30FS-R/UFM-30FS-DA modules and their accessories are fully inspected and adjusted prior to shipment. Operation can be performed immediately upon completing all required connections and operational settings.

Check your received items against the packing lists below.

◆ **UFM-30FS Series Box**

ITEM	QTY	REMARKS
UFM-30FS, UFM-30FS-R or UFM-30FS-DA	1 set	Front module: 1 Rear module: 1
Operation Manual	1	(This manual)

◆ **Internal Option**

ITEM	QTY	REMARKS
UFM-3FS3G	1	For supporting 3G-SDI

◆ **Remote Control Option**

ITEM	QTY	REMARKS
UFM-30CTL	1	Control Card
UF-NETRU	1	Network Remote Control Unit

The UFM-30FS/UFM-30FS-R/UFM-30FS-DA modules can be installed into the UF-106A, UF-106B, or UF-112 frame, but cannot be installed into the UF-106.
Up to four modules can be installed into the UF-106A (up to two into the UF-106APS).
Up to six modules can be installed into the UF-106B (up to four into the UF-106BPS).

IMPORTANT
The UFM-30FS/UFM-30FS-R /UFM-30FS-DA modules can be installed into the below UF-106A slots. Slots 2, 4, 5, 6 can be used. Slots 1 and 3 cannot be used. See the UF-106A Operation Manual for the slot numbers.

Check

Check to ensure no damage has occurred during shipment. If damage has occurred, or items are missing, inform your supplier immediately.

Table of Contents

1. Prior to Starting 1
   1-1. Welcome 1
   1-2. Features 1
   1-3. About This Manual 1

2. Panel Descriptions 2
   2-1. UFM-30FS 2
   2-2. UFM-30FS-R 3
   2-3. UFM-30FS-DA 4

3. Connection 5
   3-1. UFM-30FS Connection Example 5
   3-2. UFM-30FS-R Connection Example 5
   3-3. UFM-30FS-DA Connection Examples 6
      3-3-1. If Digital Audio Input Selected: 6
      3-3-2. If Digital Audio Output Selected: 6

4. Operation 7
   4-1. Power On 7
      4-1-1. UF-106A or UF-106B 7
      4-1-2. UF-112 7
   4-2. Menu Operation 8
   4-3. Menu List 9
   4-4. Menu Description 14
      4-4-1. Video Process AMP 14
      4-4-2. Video Clip 14
      4-4-3. Video Position/Delay 14
      4-4-4. Video Freeze 15
      4-4-5. Video Function 16
      4-4-6. Bypass Function (UFM-30FS-R) 17
      4-4-7. Audio Output Select 17
      4-4-8. Audio Output Gain 18
      4-4-9. SDI Audio Delay 19
      4-4-10. Audio Stereo Mode 19
      4-4-11. Audio Output Polarity 20
      4-4-12. Audio Fade / Mute 20
      4-4-13. SDI Audio Group 23
      4-4-14. Audio Downmix (UFM-30FS / UFM-30FS-R) 24
      4-4-15. Silence 26
      4-4-16. SRC Bypass 26
      4-4-17. AES Input/Output Mode Select (UFM-30FS-DA) 27
      4-4-18. Audio Input Select (UFM-30FS-DA) 27
      4-4-19. AES Output Select (UFM-30FS-DA) 27
      4-4-20. AES Audio Delay (UFM-30FS-DA) 28
      4-4-21. SDI ACS non-PCM Settings (UFM-30FS/FS-R) 29
      4-4-22. SDI Channel Status Forced to Be 20bit/PCM (UFM-30FS-DA) 29
      4-4-23. SDI Validity Bit Setting (UFM-30FS/FS-R) 30
      4-4-24. SDI Validity Bit Mask (UFM-30FS-DA) 30

4-4-25. Disabling Phase Alignment Among Audio Groups 31
4-4-26. System Settings 32
4-4-27. System Phase 34
4-4-28. SDI Ancillary Mode 34
4-4-29. Test Signal 35
4-4-30. Event Memory 36
4-4-30-1. About VID FRMT (VIDEO FORMAT) Event Memory 37
4-4-31. Front Panel Settings 38
4-4-32. System Status (Display Only) 38
4-4-33. SDI Audio Status (Display Only) 39
4-4-34. AES Audio Status (Display Only)(UFM-30FS-DA) 39
4-4-35. Module Information (Display Only) 39

5. Block Diagram 40
5-1. VIDEO (UFM-30FS) 40
5-2. VIDEO (UFM-30FS-R) 41
5-3. VIDEO (UFM-30FS-DA) 42
5-4. AUDIO (UFM-30FS) 43
5-5. AUDIO (UFM-30FS-R) 44
5-6. AUDIO (UFM-30FS-DA) 45
5-6-1. If AES Input Selected: 45
5-6-2. If AES Output Selected: 46

6. Internal Settings 47
6-1. Initialization (S3-6) 47
6-2. Forced Bypass Mode (S3-1)(UFM-30FS-R) 48
6-3. NTSC/PAL Lock Mode 48

7. If Problems Occur 49

8. Specifications and Dimensions 50
8-1. Unit Specifications 50
8-2. External Dimensions 52
8-2-1. UFM-30FS 52
8-2-2. UFM-30FS-R 53
8-2-3. UFM-30FS-DA 54

1. Prior to Starting

1-1. Welcome

Congratulations! By purchasing UFM-30FS/UFM-30FS-R/UFM-30FS-DA Frame Synchronizer you have entered the world of FOR-A and its many innovative products. Thank you for your patronage and we hope you will turn to FOR-A products again and again to satisfy your video and audio needs.
FOR-A provides a wide range of products, from basic support units to complex system controllers, which have been increasingly joined by products for computer video based systems. Whatever your needs, talk to your FOR-A representative. We will do our best to be of continuing service to you.

1-2. Features

UFM-30FS/UFM-30FS-R/UFM-30FS-DA are plug-in modules that can be installed to a UFM frame(UF-106A,UF-106B and UF-112) and have been specially developed as an HD/SD-SDI-supported frame / line synchronizer system using the latest digital technology. Its frame synchronization function can adjust phases and synchronize asynchronous SDI signals to genlock signals. Delay insertion is also supported. Remote control over a network is also available using the UFM-30CTL or UF-NETRU.

UFM-30FS (Standard Model)
- HD/SD SDI 2 inputs (manual or auto input switching)
- UFM-30FS/30FS-R input switching enables noiseless video and audio changeover
- Automatic muting for detected audio errors
- H/V ancillary data pass-through (source-synchronous input only)
- Proc Amp, Video Clip, Video Delay Adjustment (up to 10 frames) and Freeze functions
- 16-channel Embedded Audio support (asynchronous audio available for HD-SDI)
- 16-channel Audio SRC (Sample Rate Converter)
- Audio Delay Adjustment for each channel (up to 1,000 ms) and Audio Channel Remapping
- Audio Downmixing in UFM-30FS/30FS-R (linear PCM audio only)

UFM-30FS-R (Relay Bypass mount model)
- HD/SD SDI 2-Input (manual or auto input switching) / 1-synchronizer / 3-Output
- Relay bypass function

FM-30FS-DA (Audio Embedder / De-embedder mount model)
- HD/SD SDI 1-Input/1-Output
- AES/EBU 4-Input (8-channel) or AES/EBU 4-Output (8-channel) selectable
- If AES/EBU 4-Input selected: 16 re-embedded channels selectable from 24 channels including 8 AES/EBU and 16 SDI embedded audio channels.
- If AES/EBU 4-Output selected: 8 channels for AES/EBU output selectable from 16 channels of SDI embedded audio.

1-3. About This Manual

This manual is intended to help the user easily operate this product and make full use of its functions during operations. Before connecting or operating your unit, read this operation manual thoroughly to ensure you understand the product. After reading, it is important to keep this manual in a safe place and available for reference.

2. Panel Descriptions

2-1. UFM-30FS

◆ **Front Panel**

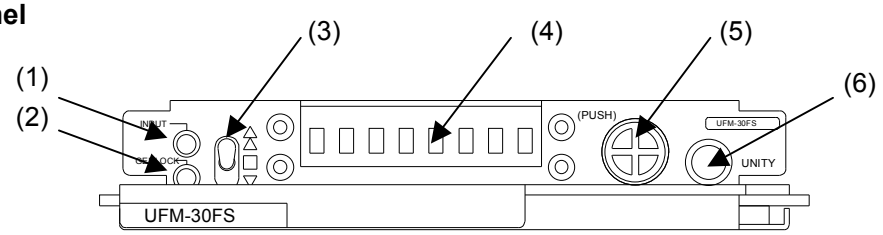

No.	Name	Description	
(1)	INPUT LED	Lit	Video signal normally present.
		Unlit	No video signal is present.
		Flashing	Video signal is present, but its format is not the same as that specified in 40-02 **System Format** or the same as the last input (if 40-02 **System Format** is set to **Auto**).
(2)	GENLOCK LED	Lit	Signals properly phase-locked and synchronized.
		Unlit	No genlock signal present.
		Flashing	Invalid genlock signal present.
		Double flashing	Video signal locked as an "F type" (See the table "Relationships between reference signal and SDI signal standards" on page 33).
		Triple flashing	Video signal locked with a genlock signal whose sampling frequency is different from that of the video signal. (*1)
(3)	Up and down switch	Allows you to move between menu items. (See section 4-2. “Menu Operation.”)	
(4)	Menu display	Displays menu items and parameters.	
(5)	Menu control	Allows you to move between menu items and adjust settings. (See section 4-2. “Menu Operation.”)	
(6)	UNITY/display switching switch	Allows you to change between default and current settings. Allows you to change between detailed and summarized menu number and item displays.	

(*1) The module unit will operate in free-running (local) mode if the input video and reference signal formats are not listed in the "Relationships between reference signal and SDI signal standards" table. (See page 33.) The stability of local clock oscillators may be affected by ambient temperature and the kind of devices they use. To minimize this problem, set the internal dipswitch to NTSC/PAL lock mode, which enables video signal locking and ensures clock accuracy to some extent. (See section 6-3. "NTSC/PAL Lock Mode".)

◆ **Rear Panel**

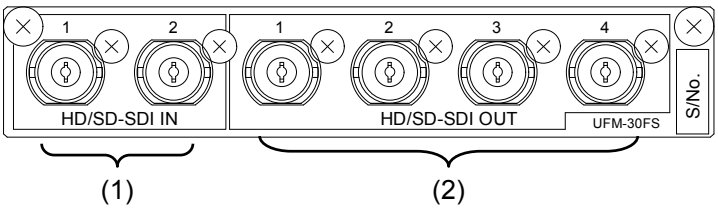

No.	Name	Description
(1)	HD/SD-SDI IN 1, 2	Used to input HD/SD-SDI signals.
(2)	HD/SD-SDI OUT 1-4	Used to output HD/SD-SDI signals.

2-2. UFM-30FS-R

◆ **Front Panel**

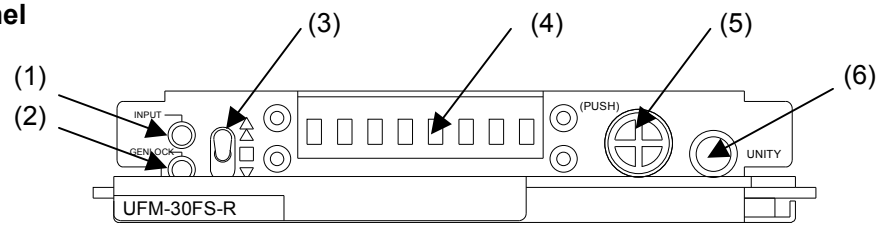

No.	Name	Description	
(1)	INPUT LED	Lit	Video signal normally present.
		Unlit	No video signal is present.
		Flashing	Video signal is present, but its format is not the same as that specified in 40-02 **System Format** or the same as the last input (if 40-02 **System Format** is set to **Auto**).
		Double flashing	Video signal bypassed. (See 4-4-6. “Bypass” for details.)
(2)	GENLOCK LED	Lit	Signals properly phase-locked and synchronized.
		Unlit	No genlock signal present.
		Flashing	Invalid genlock signal present.
		Double flashing	Video signal locked as an "F type" (See the table "Relationships between reference signal and SDI signal standards" on page 33).
		Triple flashing	Video signal locked with a genlock signal whose sampling frequency is different from that of the video signal. (*1)
(3)	Up and down switch	Allows you to move between menu items. (See section 4-2. “Menu Operation.”)	
(4)	Menu display	Displays menu items and parameters.	
(5)	Menu control	Allows you to move between menu items and adjust settings. (See section 4-2. “Menu Operation.”)	
(6)	UNITY/display switching switch	Allows you to change between default and current settings. Allows you to change between detailed and summarized menu number and item displays.	

(*1) The module unit will operate in free-running (local) mode if the input video and reference signal formats are not listed in the "Relationships between reference signal and SDI signal standards" table. (See page 33.) The stability of local clock oscillators may be affected by ambient temperature and the kind of devices they use. To minimize this problem, set the internal dipswitch to NTSC/PAL lock mode, which enables video signal locking and ensures clock accuracy to some extent. (See section 6-3. "NTSC/PAL Lock Mode".)

◆ **Rear Panel**

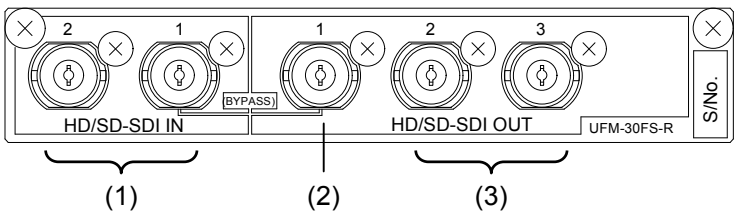

No.	Name	Description
(1)	HD/SD-SDI IN 1, 2	Used to input HD/SD-SDI signals.
(2)	HD/SD-SDI OUT 1	Used to output an HD/SD-SDI signal. (Bypassed output of HD/SD-SDI IN1 is also available.)
(3)	HD/SD-SDI OUT 2, 3	Used to output HD/SD-SDI signals.

2-3. UFM-30FS-DA

◆ **FrontRear Panel**

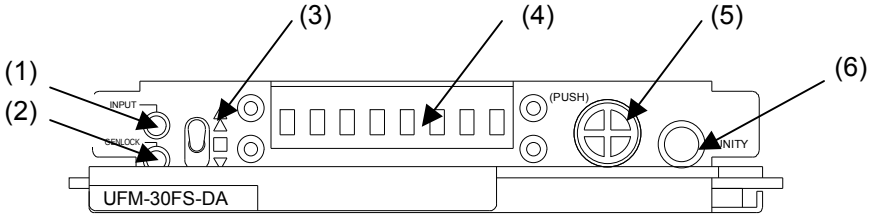

No.	Name	Description	
(1)	INPUT LED	Lit	Video signal normally present.
		Unlit	No video signal is present.
		Flashing	Video signal is present, but its format is not the same as that specified in 40-02 **System Format** or the same as the last input (if 40-02 **System Format** is set to **Auto**).
(2)	GENLOCK LED	Lit	Signals properly phase-locked and synchronized.
		Unlit	No genlock signal present.
		Flashing	Invalid genlock signal present.
		Double flashing	Video signal locked as an "F type" (See the table "Relationships between reference signal and SDI signal standards" on page 33).
		Triple flashing	Video signal locked with a genlock signal whose sampling frequency is different from that of the video signal. (*1)
(3)	Up and down switch	Allows you to move between menu items. (See section 4-2. “Menu Operation.”)	
(4)	Menu display	Displays menu items and parameters.	
(5)	Menu control	Allows you to move between menu items and adjust settings. (See section 4-2. “Menu Operation.”)	
(6)	UNITY/displa y switching switch	Allows you to change between default and current settings. Allows you to change between detailed and summarized menu number and item displays.	

(*1) The module unit will operate in free-running (local) mode if the input video and reference signal formats are not listed in the "Relationships between reference signal and SDI signal standards" table. (See page 33.) The stability of local clock oscillators may be affected by ambient temperature and the kind of devices they use. To minimize this problem, set the internal dipswitch to NTSC/PAL lock mode, which enables video signal locking and ensures clock accuracy to some extent. (See section 6-3. "NTSC/PAL Lock Mode".)

◆ **Rear Panel**

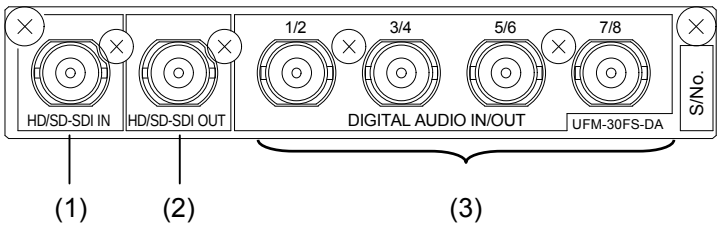

No.	Name	Description
(1)	HD/SD-SDI IN	Used to input an HD/SD-SDI signal.
(2)	HD/SD-SDI OUT	Used to output an HD/SD-SDI signal.
(3)	AES/EBU IN/OUT	Used to input or output AES/EBU audio. Input or output selectable. (See section 4-4-17. "AES Input/Output Mode Select".)

3. Connection

The UFM-30FS/UFM-30FS-R/UFM-30FS-DA modules can be installed into the UF-106A, UF-106B, or UF-112 frame. To connect the module to other devices, refer to the figure below. To install modules into the UF-106A, UF-106B, or UF-112, refer to the respective operation manuals.

IMPORTANT
Please turn off the power of all devices before connection.

3-1. UFM-30FS Connection Example

◆ **Ex. UF-112 rear panel: UFM-30FS**

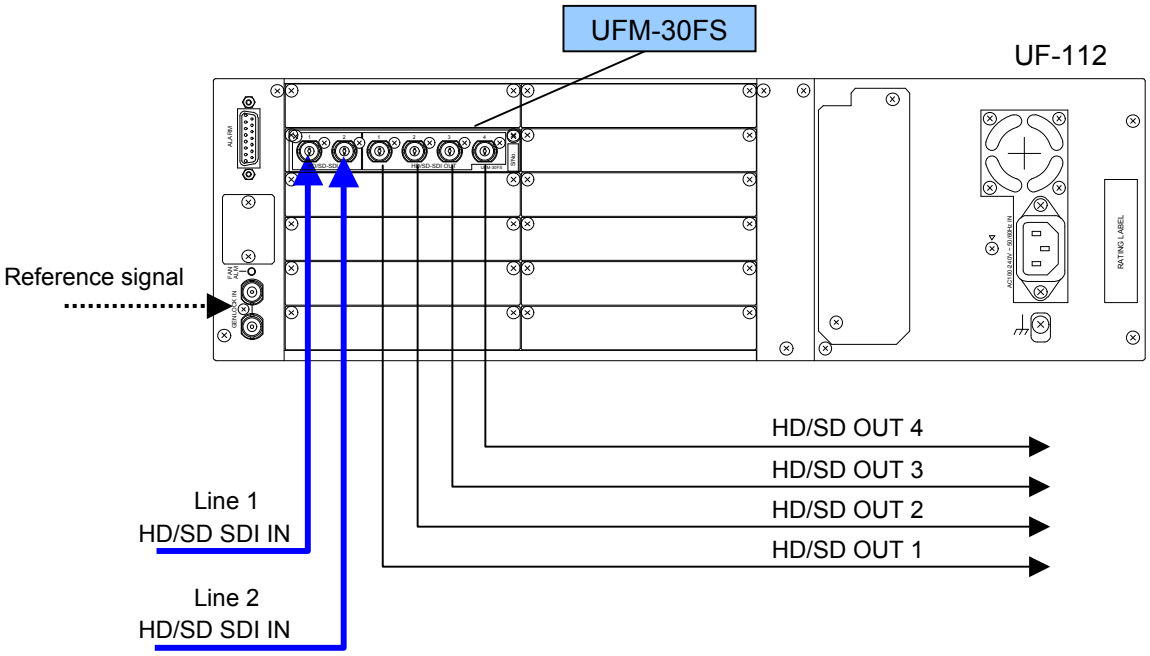

3-2. UFM-30FS-R Connection Example

◆ **Ex. UF-112 rear panel: UFM-30FS-R**

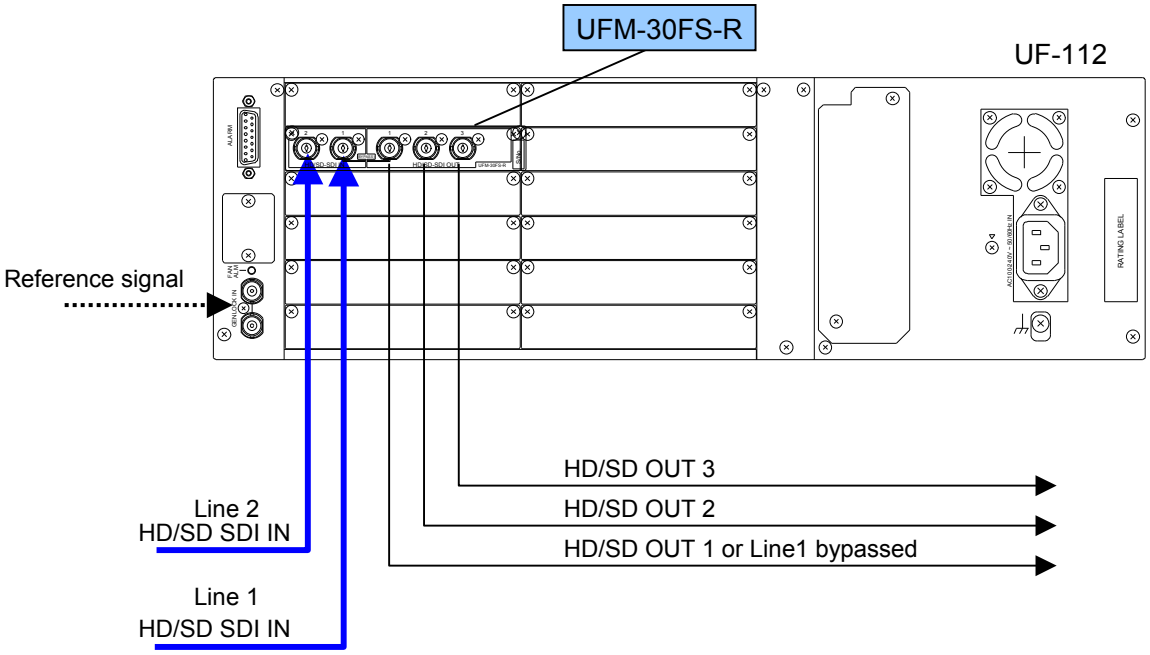

3-3. UFM-30FS-DA Connection Examples

Select Digital Audio 4 inputs or 4 outputs before using the UFM-30FS-DA. (See section 4-4-17. "AES Input/Output Mode Select".) The default setting is 4 inputs.

3-3-1. If Digital Audio Input Selected:

◆ **Ex. UF-112 rear panel: UFM-30FS-DA**

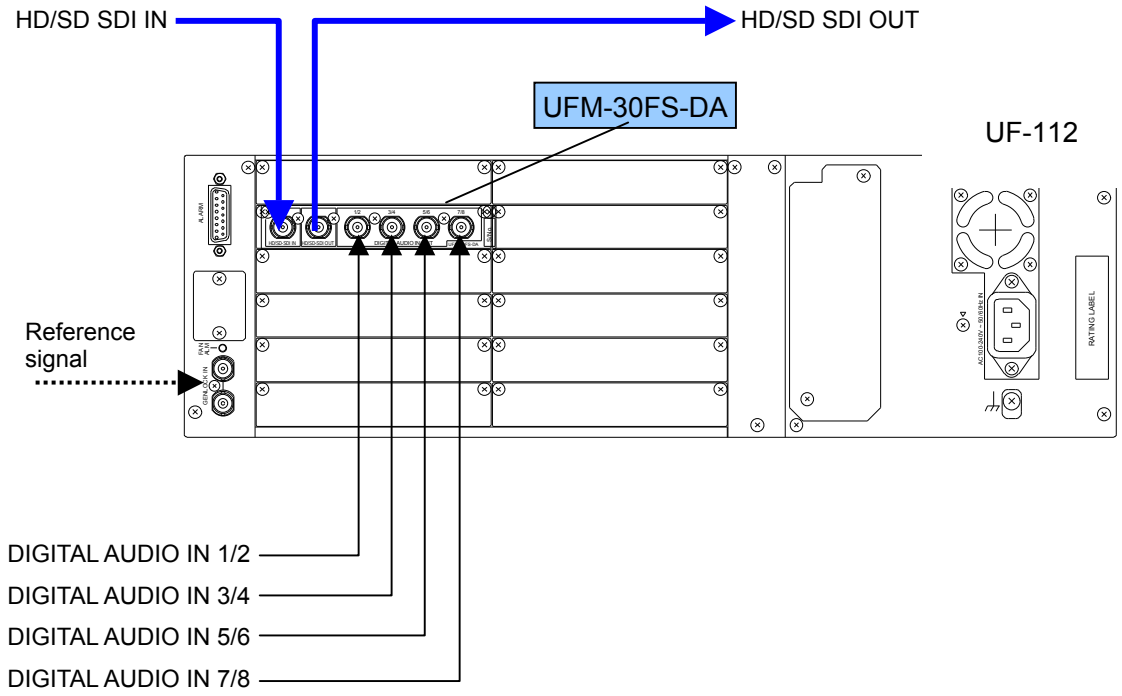

3-3-2. If Digital Audio Output Selected:

◆ **Ex. UF-112 rear panel: UFM-30FS-DA**

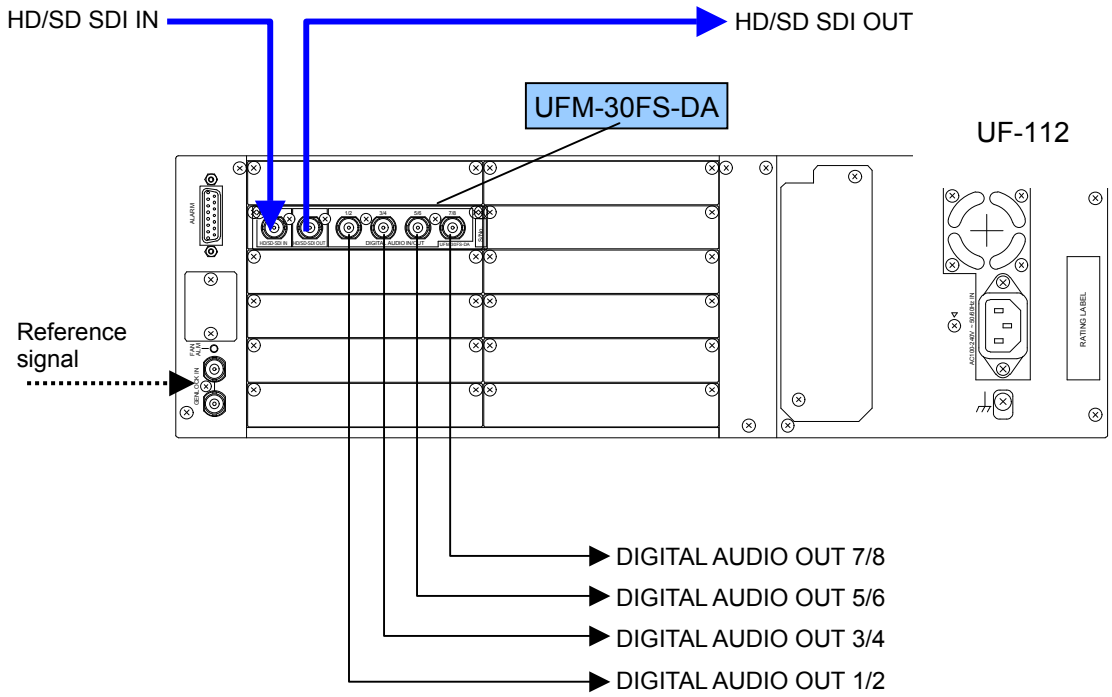

4. Operation

4-1. Power On

4-1-1. UF-106A or UF-106B

◆ **Example UF-106B**

1) Loosen and pull the screw knobs on both sides to open the front panel of the UF-106B.

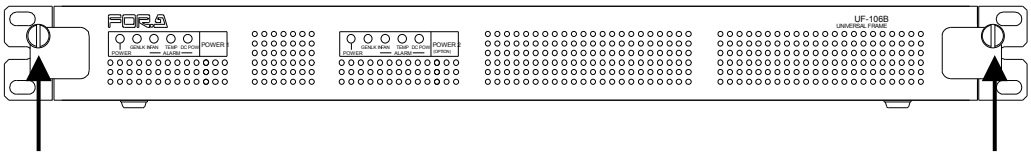

2) Turn the power switch on.

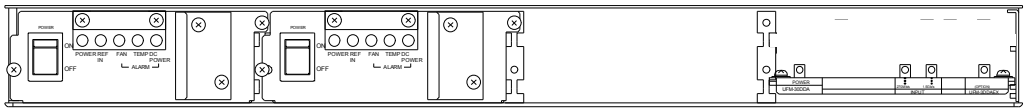

4-1-2. UF-112

1) Loosen and pull the screw knobs on both sides to open the front panel of the UF-112.

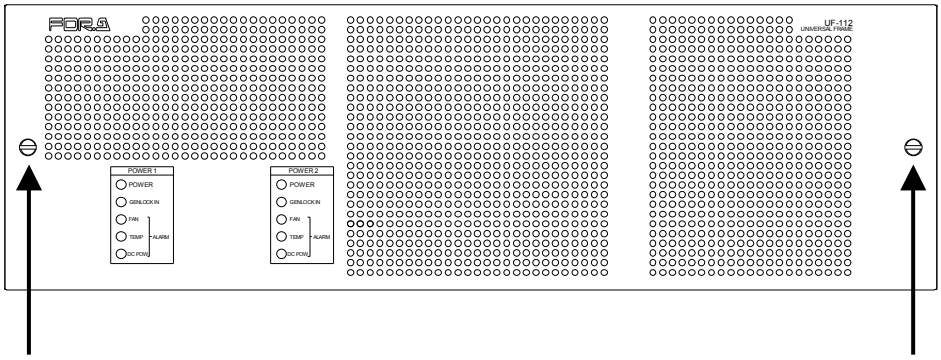

2) Make sure all devices are properly connected and turn on the power of the universal frame. After startup, “UFM-30FS”, “UFM30FSR” or “UFM30FSD” appears on the front panel. If video and genlock signals are input, the **INPUT** and **GENLOCK** indicators light up green.

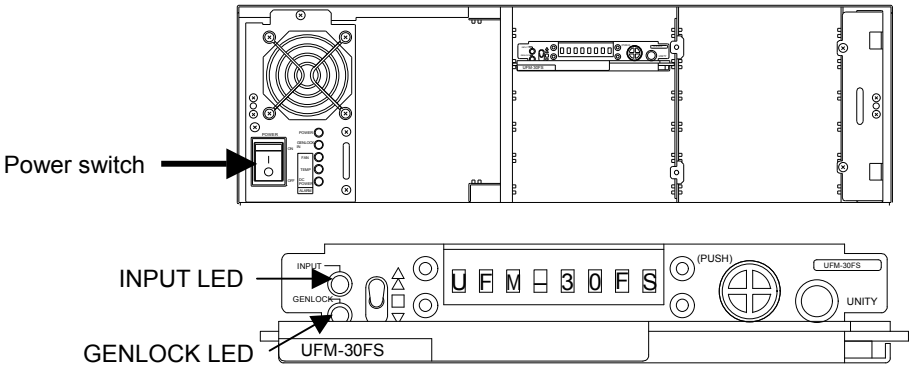

4-2. Menu Operation

1) Turn the menu control and display the desired item. Move the switch up and down to move between menu items (items shaded in the menu list in section 4-3). Pressing the **UNITY** switch while an item is selected scrolls the screen to the side and displays detailed information.

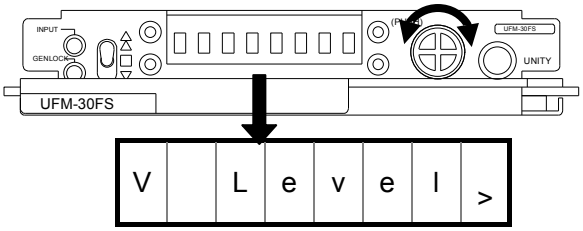

2) Press the menu control. The value of the item is displayed.

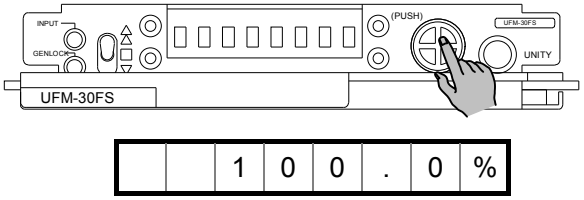

3) Turn and press the menu control to select the value and apply the setting. Pressing the **UNITY** switch resets the setting to default. (Pressing the **UNITY** switch one more time undoes the last change .) Moving the up and down switch to the up position resets the setting to the value just before entering the menu. After resetting the setting to the value before entering the menu, moving the up and down switch to the down position undoes the last change.

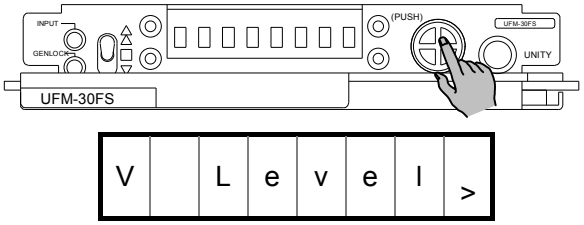

Repeat the steps 1) – 3) to make all necessary settings.

4-3. Menu List

Menu Category	Description
VIDEO	Allows you to set how to process videos.
AUDIO	Allows you to select input and output audio feeds, and set audio settings.
SYSTEM	Allows you to select input and output video signals, and set reference signal and ancillary data settings.
UTILITY	Allows you to set the test signal, event memory, and LED screen settings.
STATUS	Displays status of video and audio feeds, and the module.

Menu Category	Menu			Refer to
	No.	Item	Abbreviated Display	
VIDEO	00 00-01 00-02 00-03 00-04	Video Process AMP Video Level >\ Chroma Level >\ Setup/Black >\ Chroma Phase >\	PROCAMP V Level >\ C Level >\ BLK LVL >\ C Phase >\	4-4-1
	01 01-01 01-02 01-03	Video Clip White Clip >\ Black Clip >\ Chroma Clip >\	V Clip WHT CLP >\ BLK CLP >\ CRM CLP >\	4-4-2
	02 02-01 02-02 02-03	Video Position/Delay H Position >\ V Position >\ Frame Delay >\	POS/DLY H POS >\ V POS >\ FRM DLY >\	4-4-3
	03 03-01 03-02	Video Freeze Freeze ON/OFF >\ Freeze Field Select >\	V Freeze Freeze >\ FLD SEL >\	4-4-4
	04 04-01 04-02 04-03	Video Function Changeover > (*1) Video Loss Mode >\ Back Color >\	V FUNC CHGOV>\ LossMOD >\ BColor >\	4-4-5
	05 05-01	Bypass/Operate (*2) Bypass/Operate >\	BY-OP BY-OP>\	4-4-6

(*1) This item is available on UFM-30FS and UFM-30FS-R.
(*2) This item is available only on UFM-30FS-R.

Menu Category	Menu			Refer to
	No.	Item	Abbreviated Display	
AUDIO	21 21-01 | 21-16	Audio Output Select Audio Out Select ch1 >\ | Audio Out Select ch16 >\	A OUTSEL AOUT 1 >\ | AOUT 16 >\	4-4-7
	22 22-01 22-02 | 22-17	Audio Output Gain Audio Out Gain Unit >\ Audio Out Gain Offset ch1 >\ | Audio Out Gain Offset ch16 >\	A Gain AGain U >\ AGain 1 >\ | AGain 16 >\	4-4-8
	23 23-01 23-02 | 23-17	SDI Audio Delay SDI Audio Delay Unit >\ SDI Audio Delay Offset ch1 >\ | SDI Audio Delay Offset ch16 >\	SDI Delay SDI_D_ U >\ SDI_D_1 >\ | SDI_D_ 16 >\	4-4-9

(Continued on next page)

Menu Category	Menu			Refer to
	No.	Item	Abbreviated Display	
AUDIO	24	Audio Stereo Mode	A Stereo	4-4-10
	24-01	Stereo Mode ch1/2 >	ASMD1/2>	
	24-02	Stereo Mode ch3/4 >	ASMD3/4>	
	24-03	Stereo Mode ch5/6 >	ASMD5/6>	
	24-04	Stereo Mode ch7/8 >	ASMD7/8>	
	24-05	Stereo Mode ch9/10 >	ASMD9/ >	
	24-06	Stereo Mode ch11/12 >	ASMD11/>	
	24-07	Stereo Mode ch13/14 >	ASMD13/>	
	24-08	Stereo Mode ch15/16 >	ASMD15/>	
	25	Audio Output Polarity	A POL	4-4-11
	25-01	Audio Out Polarity ch1 >	APOL 1>	
	|	|	|	
	25-16	Audio Out Polarity ch16 >	APOL 16>	
	26	Audio Fade/Mute	AFAD/MUT	4-4-12
	26-01	Audio Error Sense >(*1)	A ErSens >	
		Fade In/Fade Out >(*3)	FIn/Out>	
	26-02	Fade Mute Time >	F/MTime >	
	26-03	SDI Output Mute >	SDI MUT>	
	27	SDI Audio Group	SDI GRUP	4-4-13
	27-01	SDI Out Enable Group1 >	OUTENG1>	
	27-02	SDI Out Enable Group2 >	OUTENG2>	
	27-03	SDI Out Enable Group3 >	OUTENG3>	
	27-04	SDI Out Enable Group4 >	OUTENG4>	
	27-05	SDI Out CLK Select Group1 >	CKSELG1>	
	27-06	SDI Out CLK Select Group2 >	CKSELG2>	
	27-07	SDI Out CLK Select Group3 >	CKSELG3>	
	27-08	SDI Out CLK Select Group4 >	CKSELG4>	
	28	Audio Down MIX (*1)	Audio DM	4-4-14
	28-01	Audio Down MIX Mode Select >	DM Mode >	
	28-02	Audio Down MIX Bus Assign-L >	ASIGN L >	
	28-03	Audio Down MIX Bus Assign-R >	ASIGN R >	
	28-04	Audio Down MIX Bus Assign-C >	ASIGN C >	
	28-05	Audio Down MIX Bus Assign-Ls >	ASIGNLs >	
	28-06	Audio Down MIX Bus Assign-Rs >	ASIGNRs >	
	28-07	Audio Center Mix Level >	DM LVLC>	
	28-08	Audio Surround Mix Level >	DM LVLS >	
	28-09	Audio DownMIX Master Level >	DM LVLM >	
	30	Silence Setting	SILNCSET	4-4-15
	30-01	Silence Detect Time >	SILTime >	
	30-02	Silence Level >	SIL LVL >	
	31	SRC Bypass Setting >	SRC BYPS	4-4-16
	31-01	SRC Bypass >	SRCBYPS >	
	33	AES Input/Output Mode Select (*3)	AES I/O	4-4-17
	33-01	AES Input/ Output Select >	AES I/O >	
	34	Audio Input Select (*3)	Audio IN	4-4-18
	34-01	Audio Input Select Group1 >	A_IN_G1 >	
	34-02	Audio Input Select Group2 >	A_IN_G2 >	
	34-03	Audio Input Select Group3 >	A_IN_G3 >	
	34-04	Audio Input Select Group4 >	A_IN_G4 >	
	35	AES Output Select (*3)	AESO SEL	4-4-19
	35-01	AES Output Select ch1/2 >	AES 1/2 >	
	35-02	AES Output Select ch3/4 >	AES 3/4 >	
	35-03	AES Output Select ch5/6 >	AES 5/6 >	
	35-04	AES Output Select ch7/8 >	AES 7/8 >	

(Continued on next page)

Menu Category	Menu			Refer to
	No.	Item	Abbreviated Display	
AUDIO	36	AES Audio Delay (*3)	AESDelay	4-4-20
	36-01	AES Audio Delay Unit >	AES_D_U >	
	36-02	AES Audio Delay Offset ch1 >	AES_D_1 >	
	36-03	AES Audio Delay Offset ch2 >	AES_D_2 >	
	36-04	AES Audio Delay Offset ch3 >	AES_D_3 >	
	36-05	AES Audio Delay Offset ch4 >	AES_D_4 >	
	36-06	AES Audio Delay Offset ch5 >	AES_D_5 >	
	36-07	AES Audio Delay Offset ch6 >	AES_D_6 >	
	36-08	AES Audio Delay Offset ch7 >	AES_D_7 >	
	36-09	AES Audio Delay Offset ch8 >	AES_D_8 >	
	37	SDI ACS non-PCM Setting (*1)	CSnonPCM	4-4-21
	37-01	ACS non-PCM Setting Ch1/2 >	NPCM1/2>	
	37-02	ACS non-PCM Setting Ch3/4 >	NPCM3/4>	
	37-03	ACS non-PCM Setting Ch5/6 >	NPCM5/6>	
	37-04	ACS non-PCM Setting Ch7/8 >	NPCM7/8>	
	37-05	ACS non-PCM Setting Ch9/10 >	NPCM9/ >	
	37-06	ACS non-PCM Setting Ch11/12 >	NPCM11/>	
	37-07	ACS non-PCM Setting Ch13/14 >	NPCM13/>	
	37-08	ACS non-PCM Setting Ch15/16 >	NPCM15/>	
	37	ACS Forced 20bit/PCM Setting (*3)	20bitPCM	4-4-22
	37-01	ACS Forced 20bit/PCM Ch1/2 >	FPCM1/2>	
	37-02	ACS Forced 20bit/PCM Ch3/4 >	FPCM3/4>	
	37-03	ACS Forced 20bit/PCM Ch5/6 >	FPCM5/6>	
	37-04	ACS Forced 20bit/PCM Ch7/8 >	FPCM7/8>	
	37-05	ACS Forced 20bit/PCM Ch9/10 >	FPCM9/ >	
	37-06	ACS Forced 20bit/PCM Ch11/12 >	FPCM11 >	
	37-07	ACS Forced 20bit/PCM Ch13/14 >	FPCM13 >	
	37-08	ACS Forced 20bit/PCM Ch15/16 >	FPCM15 >	
	38	SDI Validity Bit Setting (*1)	Vbit SET	4-4-23
	38-01	Validity Bit Setting Ch1/2 >	Vbit1/2>	
	38-02	Validity Bit Setting Ch3/4 >	Vbit3/4>	
	38-03	Validity Bit Setting Ch5/6 >	Vbit5/6>	
	38-04	Validity Bit Setting Ch7/8 >	Vbit7/8>	
	38-05	Validity Bit Setting Ch9/10 >	Vbit9/ >	
	38-06	Validity Bit Setting Ch11/12>	Vbit11/>	
	38-07	Validity Bit Setting Ch13/14>	Vbit13/>	
	38-08	Validity Bit Setting Ch15/16>	Vbit15/>	
	38	ADP Validity Bit Mask Setting (*3)	Vbit MASK	4-4-24
	38-01	ADP Validity Bit Mask Ch1/2 >	Vbit1/2>	
	38-02	ADP Validity Bit Mask Ch3/4 >	Vbit3/4>	
	38-03	ADP Validity Bit Mask Ch5/6 >	Vbit5/6>	
	38-04	ADP Validity Bit Mask Ch7/8 >	Vbit7/8>	
	38-05	ADP Validity Bit Mask Ch9/10 >	Vbit9/ >	
	38-06	ADP Validity Bit Mask Ch11/12 >	Vbit11/>	
	38-07	ADP Validity Bit Mask Ch13/14 >	Vbit13/>	
	38-08	ADP Validity Bit Mask Ch15/16 >	Vbit15/>	
	39	Alignment Between Audio Group	Aliment	4-4-25
	39-01	Alignment Between Audio Group>	Aliment>	

(*1) This item is available on UFM-30FS and UFM-30FS-R.
(*3) This item is available only on UFM-30FS-DA.

Menu Category	Menu			Refer to
	No.	Item	Abbreviated Display	
SYSTEM	40 40-01 40-02 40-03 40-04	System Setting Input Select > (*1) System Format >
Sync Mode >
HD SDI Input ACLK Select (*1)	System IN SEL>
SYS FMT>
SYNCMOD>
ACLKSEL>	4-4-26
	41 41-01 41-02	System Phase System Phase H >
System Phase V >	SYSPhase SYSPH H>
SYSPH V>	4-4-27
	42 42-01 42-02	SDI Ancillary Mode SDI HANC Mode >
SDI VANC Mode >	SDI ANCI HANCMod>
VANCMod>	4-4-28

(*1) This item is available on UFM-30FS and UFM-30FS-R.

Menu Category	Menu			Refer to
	No.	Item	Abbreviated Display	
UTILITY	60 60-01 60-02	Test Signal Video Test Signal >
Audio Test Signal >	Test SIG VideoTS>
AudioTS>	4-4-29
	61 61-01 61-02 61-03 61-04	Event Memory Start Up Event Load >
Auto Event Load >
Event Load >
Event Save >	EventMEM STUP EL>
Auto EL>
Ev Load>
Ev Save>	4-4-30
	63 63-01 63-02	Front Panel Setting Front Brightness >
Panel Lock >	PanelSET Bright >
Lock >	4-4-31

Menu Category	Menu			Refer to
	No.	Item	Abbreviated Display	
STATUS	80	System Status	SYSTMSTS	4-4-32
	80-01	Operation Status >	OPE STS >	
	80-02	Selected SDI Input > (*1)	SEL IN >	
	80-03	Reference Format >	REF STS >	
	80-04	SDI IN1 Format >	IN1 STS >	
	80-05	SDI IN2 Format > (*1)	IN2 STS >	
	80-06	Input to Reference Phase >	I/R PHS >	
	80-07	Video I/O Delay >	VIO DLY >	
	80-08	SDI IN 1 Down MIX Level > (*1)	SDI1DML >	
	80-09	SDI IN 2 Down MIX Level > (*1)	SDI2DML >	
	81	SDI Audio Status	SDIA STS	4-4-33
	81-01	SDI Input Status ch1 >	SDI Ch1 >	
	81-02	SDI Input Status ch2 >	SDI Ch2 >	
	81-03	SDI Input Status ch3 >	SDI Ch3 >	
	81-04	SDI Input Status ch4 >	SDI Ch4 >	
	81-05	SDI Input Status ch5 >	SDI Ch5 >	
	81-06	SDI Input Status ch6 >	SDI Ch6 >	
	81-07	SDI Input Status ch7 >	SDI Ch7 >	
	81-08	SDI Input Status ch8 >	SDI Ch8 >	
	81-09	SDI Input Status ch9 >	SDI Ch9 >	
	81-10	SDI Input Status ch10 >	SDICh10 >	
	81-11	SDI Input Status ch11>	SDICh11 >	
	81-12	SDI Input Status ch12 >	SDICh12 >	
	81-13	SDI Input Status ch13 >	SDICh13 >	
	81-14	SDI Input Status ch14 >	SDICh14 >	
	81-15	SDI Input Status ch15 >	SDICh15 >	
	81-16	SDI Input Status ch16 >	SDICh16 >	
	82	AES Audio Status (*3)	AES STS	4-4-34
	82-01	AES Input Status ch1/2>	AESS1/2>	
	82-02	AES Input Status ch3/4>	AESS3/4>	
	82-03	AES Input Status ch5/6>	AESS5/6>	
	82-04	AES Input Status ch7/8>	AESS7/8>	
	83	Module Information	MDL INFO	4-4-35
	83-01	Slot Number >	Slot NO >	
	83-02	CPU Version Information >	CPU >	
	83-03	FPGA Version Information >	FPGA >	
	83-04	Option Information >	Option >	

(*1) This item is available on UFM-30FS and UFM-30FS-R.
(*3) This item is available only on UFM-30FS-DA.

4-4. Menu Description

4-4-1. Video Process AMP

Menu		Default	Setting Range (Steps)	Description
No.	Item			
00	Video Process AMP			
00-01	Video Level >	100.0%	0.0 to 200.0% (0.1%)	Allows you to adjust the video level.
00-02	Chroma Level >	100.0%	0.0 to 200.0% (0.1%)	Allows you to adjust the chroma level.
00-03	Setup / Black >	0.0%	-7.0 to 20.0% (0.1%)	Allows you to adjust the black level.
00-04	Chroma Phase >	0.0°	-180.0 to 180.0° (0.1°)	Allows you to adjust the chroma phase.

4-4-2. Video Clip

Menu		Default	Setting Range (Steps)	Description
No.	Item			
01	Video Clip			
01-01	White Clip >	109.0%	50.0 to 109.0% (0.1%)	Allows you to specify the highest value of Y signal for clipping.
01-02	Black Clip >	-7.0%	-7.0 to 50.0% (0.1%)	Allows you to specify the lowest value of Y signal for clipping.
01-03	Chroma Clip >	113.0%	50.0 to 113.0% (0.1%)	Allows you to specify the highest and the lowest value of PbPr signal for clipping.

4-4-3. Video Position/Delay

Menu		Default	Setting Range (Steps)	Description
No.	Item			
02	Video Position/Delay			
02-01	H Position >	0 CLK	(*1)	Allows you to adjust the horizontal position of output video.
02-02	V Position >	0 Line	(*1) (*2)	Allows you to adjust the vertical position of output video.
02-03	Frame Delay >	Off	Off, 1 to 10 Frame (1Frame) (*2) (*3)	Allows you to adjust the amount of frame delay.

(*1) The setting range varies depending on the format. See the table “Video Phase Setting Range” in the next page for details.

(*2) If **40-03 Sync Mode** is set to **Line Sync (LS)**, **Frame Delay** and **V Position** are disabled. An error message “**Line Sync Now!**” appears when there is any attempt to change **Frame Delay** or **V Position**.

(*3) If **03-01 Freeze ON/OFF** is set to **On**, or the image is frozen by the **Auto Freeze** setting of 04-02 **Video Loss Mode**, the **Frame Delay** setting doesn't take effect.

◆ **Video Phase Setting Range**

<table>
<tr><th rowspan="2">Format</th><th colspan="4">Setting Range (Steps)</th></tr>
<tr><th>41-01
System Phase H
[clk]</th><th>41-02
System Phase V
[Lines]</th><th>02-01
H Position
[clk]</th><th>02-02
V Position [Lines]</th></tr>
<tr><td>525/60</td><td>-858 to +858 (1)</td><td>-263 to +263 (1)</td><td>-92 to +92 (4)</td><td>-30 to +30 (1)</td></tr>
<tr><td>625/50</td><td>-864 to +864 (1)</td><td>-313 to +313 (1)</td><td>-92 to +92 (4)</td><td>-36 to +36 (1)</td></tr>
<tr><td>1080/60i</td><td rowspan="2">-1100 to +1100 (1)</td><td rowspan="13">-563 to +563 (1)</td><td rowspan="13">-240 to +240 (2)</td><td rowspan="5">-68 to +68 (1)</td></tr>
<tr><td>1080/59.94i</td></tr>
<tr><td>1080/50i</td><td>-1320 to +1320 (1)</td></tr>
<tr><td>1080/24PsF</td><td rowspan="2">-1375 to +1375 (1)</td></tr>
<tr><td>1080/23.98PsF</td></tr>
<tr><td>1080/60p</td><td>-1100 to +1100 (1)</td><td rowspan="8">-135 to +135 (1)</td></tr>
<tr><td>1080/59.94p</td><td>-1100 to +1100 (1)</td></tr>
<tr><td>1080/50p</td><td>-1320 to +1320 (1)</td></tr>
<tr><td>1080/30p</td><td rowspan="2">-1100 to +1100 (1)</td></tr>
<tr><td>1080/29.97p</td></tr>
<tr><td>1080/25p</td><td>-1320 to +1320 (1)</td></tr>
<tr><td>1080/24p</td><td rowspan="2">-1375 to +1375 (1)</td></tr>
<tr><td>1080/23.98p</td></tr>
<tr><td>720/60p</td><td rowspan="2">-825 to +825 (1)</td><td rowspan="3">-375 to +375 (1)</td><td rowspan="3">-160 to +160 (2)</td><td rowspan="3">-90 to +90 (1)</td></tr>
<tr><td>720/59.94p</td></tr>
<tr><td>720/50p</td><td>-990 to +990 (1)</td></tr>
</table>

4-4-4. Video Freeze

Menu		Default	Setting Range	Description
No.	Item			
03	Video Freeze			
03-01	Freeze ON / OFF >	Off	Off, On	Allows you to manually freeze a frame or field. (*1)
03-02	Freeze Field Select >	Frame	Frame, Odd, Even	**Frame:** Enables frame freeze if **Freeze ON/OFF** is **On**. **Odd:** Enables field freeze in odd field if **Freeze ON/OFF** is **On**. **Even:** Enables field freeze in even field if **Freeze ON/OFF** is **On**. (*1)

(*1) If **40-03 Sync Mode** is set to **Line Sync (LS)**, Freeze is automatically turned off and **03-01 Freeze ON/OFF** and **03-02 Freeze Field Select** cannot be selected. An error message "**Line Sync Now!**" appears when there is any attempt to change **Freeze Field Select**.
In addition, if a progressive format such as 720/59p or 720/50p is selected, a message **"Progressive Format Selected"** appears and **Freeze Field Select** cannot be selected.

4-4-5. Video Function

Menu		Default	Setting Range	Description
No.	Item			
04	Video Function			
04-01	Changeover >	On	Off, On	Automatically replaces the input if video loss occurs in the selected channel. (*1)
04-02	Video Loss Mode >	BackCOL	BackCOL, Auto Freeze (*2), ColorBar, Disable	Allows you to specify the action to be taken when video loss occurs.
04-03	Back Color >	Black	Black, Gray, Blue,	Allows you to select a background color display when video loss occurs.

(*1) Once **Changeover** takes place, the message "Input changed from Ch1 to Ch2 (or Ch2 to Ch1)" appears on the menu display to indicate that the video was changed. This message remains visible until the next action is taken. The **40-01 Input Select** setting is also changed automatically. The change cannot be reverted even when the original input is recovered. After recovery, manually set **40-01 Input Select** as necessary.
Changeover is disabled while **Bypass** is enabled. (UFM-30FS-R).
Changeover is not available on UFM-30FS-DA.

(*2) Video freeze will be released if proper video input is recovered or **04-02 Video Loss Mode** is set to other than **Auto Freeze**.
If **40-03 SyncMode** is set to **Line Sync (LS)** or **Input**, it performs **Back Color** although **Video Loss Mode** is set to **Auto Freeze**.

The output signal changes depending on the menu settings and whether or not the input signal is present.

<table>
<tr><th>Input Select (*1)</th><th>SDI IN1 Input</th><th>Changeover</th><th>SDI IN2 Input</th><th>Video Loss Mode</th><th>Video Output</th></tr>
<tr><td rowspan="10">SDI IN1</td><td colspan="4">Present</td><td>SDI IN 1</td></tr>
<tr><td rowspan="4">Not present</td><td colspan="3" rowspan="4">Off</td><td>Back Color</td><td>Background color</td></tr>
<tr><td>Auto Freeze</td><td>Freezes the last image</td></tr>
<tr><td>Color Bar</td><td>SMPTE color bars</td></tr>
<tr><td>Disable</td><td>Stops outputting the SDI signal</td></tr>
<tr><td rowspan="5">On</td><td colspan="2">Present</td><td>SDI IN2</td></tr>
<tr><td rowspan="4">Not present</td><td>Back Color</td><td>Background color</td></tr>
<tr><td>Auto Freeze</td><td>Freezes the last image</td></tr>
<tr><td>Color Bar</td><td>SMPTE color bars</td></tr>
<tr><td>Disable</td><td>Stops outputting the SDI signal</td></tr>
</table>

(*1) If **Input Select** is set to **SDI IN2**, SDI IN1 and SDI IN2 are replaced.

4-4-6. Bypass Function (UFM-30FS-R)

NOTE
Bypass is available on the **UFM-30FS-R** only. If the power is turned off or the front module isn't installed, the signal input to SDI IN1 is bypassed to SDI OUT1, regardless of the **Bypass/Operate** settings.

Menu		Default	Setting	Description
No.	Item			
05	Bypass/Operate			
05-01	Bypass/Operate >	Operate	Operate, Bypass	If set to **Bypass**, the signal input to SDI IN1 is bypassed to SDI OUT1, regardless of the signal input to SDI IN2 or the setting in **40-01 Input Select**. While the signal is bypassed, no signal is output to SDI OUT2 or SDI OUT3.

While **Bypass/Operate** is set to **Bypass**, the **INPUT** indicator on the front panel double flashes repeatedly.
If the power is turned to off while setting **Bypass/Operate**, the UFM-30FS-R will restart in **Operate** mode. The **Bypass/Operate** setting is not saved to the event memory. When powering on the UFM-30FS-R with the **S3-1** dipswitch on the front module to **ON**, it will start in **Bypass** mode. See section 6-2 "Forced Bypass mode (S3-1)(UFM-30FS-R)."

4-4-7. Audio Output Select

NOTE
The **Ch1-Ch16** channels selected in **Audio Input Select** (see section 4-4-18) are used to map sources below in the UFM-30FS-DA. In the UFM-30FS and UFM-30FS-R, the **Ch1-Ch16** of embedded audio input are used for source mapping.

Menu		Default	Setting Range	Description
No.	Display			
21	Audio Output Select			
21-01	Audio Out Select ch1 >	SRC Ch1	SRC Ch1-Ch16, Silence, Tone, DWNMIXL (*1), DWNMIXR (*1),	Allows you to select an audio signal for each audio output channel. **SRC Ch1-Ch16:** Selects a signal from the sampling rate converter circuit. **Silence:** Outputs a mute signal. **Tone:** Outputs an internally generated signal. **DWNMIXL (Downmix ch L):** Outputs Downmix signal (L-channel). **DWNMIXR (Downmix ch R):** Outputs Downmix signal (R-channel).
21-02	Audio Out Select ch2 >	SRC Ch2		
21-03	Audio Out Select ch3 >	SRC Ch3		
21-04	Audio Out Select ch4 >	SRC Ch4		
21-05	Audio Out Select ch5 >	SRC Ch5		
21-06	Audio Out Select ch6 >	SRC Ch6		
21-07	Audio Out Select ch7 >	SRC Ch7		
21-08	Audio Out Select ch8 >	SRC Ch8		
21-09	Audio Out Select ch9 >	SRC Ch9		
21-10	Audio Out Select ch10 >	SRC Ch10		
21-11	Audio Out Select ch11 >	SRC Ch11		
21-12	Audio Out Select ch12 >	SRC Ch12		
21-13	Audio Out Select ch13 >	SRC Ch13		
21-14	Audio Out Select ch14 >	SRC Ch14		
21-15	Audio Out Select ch15 >	SRC Ch15		
21-16	Audio Out Select ch16 >	SRC Ch16		

(*1) This setting is unavailable in UFM-30FS-DA.
If the input audio is **non-PCM**, any two selected audio channels that are improper for an L/R stereo pair will be automatically changed to a proper stereo pair that includes the channel selected for the smaller odd number output such as ch1.

Example 1: If **SRC7** is selected for **ch1** and **SRC8** is selected for **ch2**
The selected channels form a proper L/R stereo pair. Therefore, the selection will be set as selected.

Example 2: If **SRC7** is selected for **ch1** and **SRC10** is selected for **ch2**
The selected channels do not form a proper L/R stereo pair. The channel selected for ch1 has priority. Therefore, the selection will be set to a stereo pair that includes SRC7; i.e., SRC7 for ch1 and SRC8 for ch2.

Example 3: If **SRC6** is selected for **ch1** and **SRC9** is selected for **ch2**
The selected channels do not form a proper L/R stereo pair. The channel selected for Out1 has priority. Therefore, the selection will be set to a stereo pair that includes In5; i.e., SRC5 for Out1 and SRC6 for Out2.

If the selected channel and the actual output channel are different while processing non-PCM audio, "*" and the channel number of the actual output will be displayed in the menu window. However, automatic changes will not be saved. Therefore, when the module returns to PCM audio processing, output channels will revert back to the channels selected in the menu.

4-4-8. Audio Output Gain

Menu		Default	Setting Range (Steps)	Description
No.	Item			
22	Audio Output Gain			
22-01	Audio Out Gain Unit >	0.0 dB	-20.0 to +20.0 dB (0.1 dB)	Allows you to set gain that is common for all output audios.
22-02 | 22-17	Audio Out Gain Offset ch1 > | Audio Out Gain Offset ch16 >	0.0 dB	-20.0 to +20.0 dB (0.1 dB)	Allows you to finely adjust the gain that is set for all output audio, respectively for each channel.

Adjust gain at **Audio Out Gain Unit** first, and then adjust gain for individual channels (**Audio Out Gain Offset ch1~ch16**) if needed.
Changing the value for **Audio Out Gain Unit** changes the values of every channel while maintaining the differences between the channels. If the total value exceeds the range of -20.0 to +20.0 dB, the setting is automatically set to the minimum or maximum allowed value.
Non-PCM audio signals are automatically bypassed.

4-4-9. SDI Audio Delay

Menu		Default	Setting Range (Steps)	Description
No.	Item			
23	SDI Audio Delay			
23-01	SDI Audio Delay Unit >	16 ms	2 to +1,000 ms (1 ms)	Allows you to add audio delay that is common for all channels of SDI output.
23-02 | 23-17	SDI Audio Delay Offset ch1 > SDI Audio Delay Offset ch16 >	16 ms	2 to +1,000 ms (1 ms)	Allows you to adjust the delay for each channel by adding to an SDI Audio Delay Unit value.

The total audio delay for each channel equals the **SDI Audio Delay Offset** value, which is calculated by referring to the **SDI Audio Delay Unit**.
If the total value exceeds the range of 2 to 1,000 msec, it is automatically set to the minimum or maximum allowed value. The minimum value is 2 msec. including internal processing delay.
If different values are set for an L/R stereo pair (such as ch1 and ch2) of non-PCM audio, the R channel value will be automatically changed to match that of the L channel.
To maintain lip sync, see the value of **80-07 Video I/O Delay**.

If **AES Output** is selected on the UFM-30FS-DA, adjust the AES audio delay using this menu. Be careful that, in this case, the same delay value is applied to both the SDI and AES audio. If AES Output is selected on the UFM-30FS-DA, adjust the AES audio delay using the **36 AES Output Delay**.

If the **SDI Audio Delay Unit** is changed, the SDI audio channel delays are changed accordingly, maintaining the differences among the channels. If the total value exceeds the range of 2 to 1,000 msec, an asterisk (*) appears and it is automatically set to the minimum or maximum allowed value.

4-4-10. Audio Stereo Mode

Menu		Default	Setting Range	Description
No.	Item			
24	Audio Stereo Mode			
24-01 | 24-08	Stereo Mode ch 1/2 > | Stereo Mode ch 15/16 >	Stereo	Stereo, Swap, Mono-L, Mono-R, Mono-SUM	Allows you to select an output mode from stereo and mono mode for each stereo pair individually. **Stereo:** Outputs the L audio input signal to L and R audio input signal to R. **Swap:** Outputs the L audio input signal to R and R audio input signal to L. **Mono-L:** Outputs the L audio input signal to both L and R. **Mono-R:** Outputs the R audio input signal to both L and R. **Mono-Sum:** Outputs half the sum of L and R audio input signals.

When **non-PCM** audio is input, this setting is **invalid** even if the setting can be changed. In this case, an asterisk (*) is displayed in the menu window.

4-4-11. Audio Output Polarity

Menu		Default	Setting Range	Description
No.	Item			
25	Audio Output Polarity			
25-01 | 25-16	Audio Out Polarity ch1 > | Audio Out Polarity ch16 >	Normal	Normal, Invert	Allows you to set the audio output polarity for each channel individually. Setting to **Invert** inverts the polarity.

When **non-PCM** audio is input, this setting is **invalid** even if the setting can be changed. In this case, an asterisk (*) is displayed in the menu window.

4-4-12. Audio Fade / Mute

◆ **UFM-30FS/FS-R**

Menu		Default	Setting Range	Description
No.	Item			
26	Audio Fade / Mute			
26-01	Audio Error Sense>(UFM-30FS/FS-R)	Normal	Disable, Normal, Snsitive	UFM-30FS can detect audio status changes due to input signal switching, etc. and automatically fade out (*1) and mute audio. This menu item enables or disables the Fade/Mute function and sets the detection level. **Disable**: Disables the Fade/Mute function. Do not use this setting under normal conditions. **Normal**: Fades and mutes audio if SDI signal, ADP or DBN change is detected. Use this setting under normal conditions. **Snsitive (Sensitive)**: Fades and mutes audio if SDI signal, ADP DBN, channel status, or EDP (SD-SDI only) change is detected.
26-02	Fade Mute Time >	12 msec	12 msec, 24 msec	Allows you to set the audio recovery time. (*2)
26-03	SDI Output Mute >	Off	Off, On	Allows you to mute all SDI audio signals at once.

(*1) The fade time is automatically set according to the audio delay setting (SDI AUDIO Delay or AES Audio Delay).
(*2) In certain software versions,"4msec" or "8msec" may be displayed.

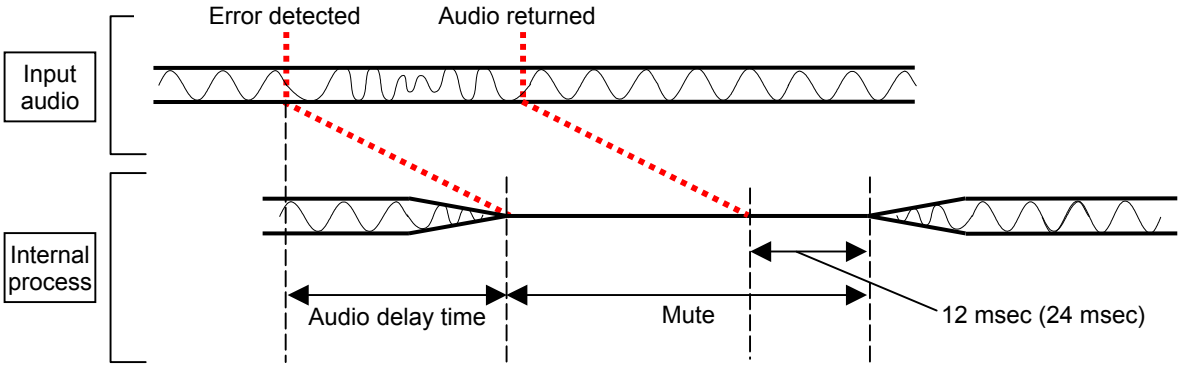

NOTE
Set Audio Error Sense to **Normal** under the normal conditions. Use **Disable** only under limited circumstances such as when audio is interrupted or noise occurs. When the audio status has changed due to input signal switching etc., the frame synchronizer will re-initialize the fading or audio delay process depending on the change. Note that if abnormal or incorrect data has been added to audio, the frame synchronizer detects the status change and performs process re-initialization, even when voices or sounds are heard normally. Although the frame synchronizer can detect audio errors and automatically fix them, doing so may result in unwanted noise or an audio breakdown in some cases when the frame synchronizer fails to adjust accordingly. In such case, set Audio Error Sense to **Disable**, which stops the automatic error correction and passes as much audio through as possible. Doing so will produce the following restrictions however. -Input signal switching produces up to 1.3 msec of audio delay against SDI streams. and causes an audio phase difference in groups. -The SDI Output Mute setting is disabled (but the **Silence** setting for each channel is available.) When changing Audio Error Sense to **Disable**, or from **Disable** to **Normal**, either of the following two actions should be taken: (a) Change Alignment Between Audio Group from **Disable** to **Enable**. (b) Unplug and replug the SDI input. These actions re-initialize the audio input circuit and minimize the audio delay and phase difference. Note that they also momentarily stop audio output.

◆ **UFM-30FS/FS-R**

Menu		Default	Setting Range	Description
No.	Item			
26	Audio Fade / Mute			
26-01	Fade In/ Fade Out > (UFM-30FS-DA)	On	Off, On (*1)	**On**: Fades out and mutes audio (as least 10 msec) when audio error is detected. **Off**: Mutes audio (as least 10 msec) without fading when audio error is detected. Audio will return when the error is no longer present.
26-02	Fade Mute Time >	12 msec	12 msec, 24 msec	Allows you to set the audio recovery time. (*2)
26-03	SDI Output Mute >	Off	Off, On	Allows you to mute all SDI audio signals at once.

(*1) The fade time is automatically set according to the audio delay setting (SDI AUDIO Delay or AES Audio Delay).
(*2) In certain software versions,"4msec" or "8msec" may be displayed.

NOTE
The Audio Fade function may not operate correctly when audio switching occurs between asynchronous signals or signals of different sampling rates in AES audio input to a UFM-30FS-DA.

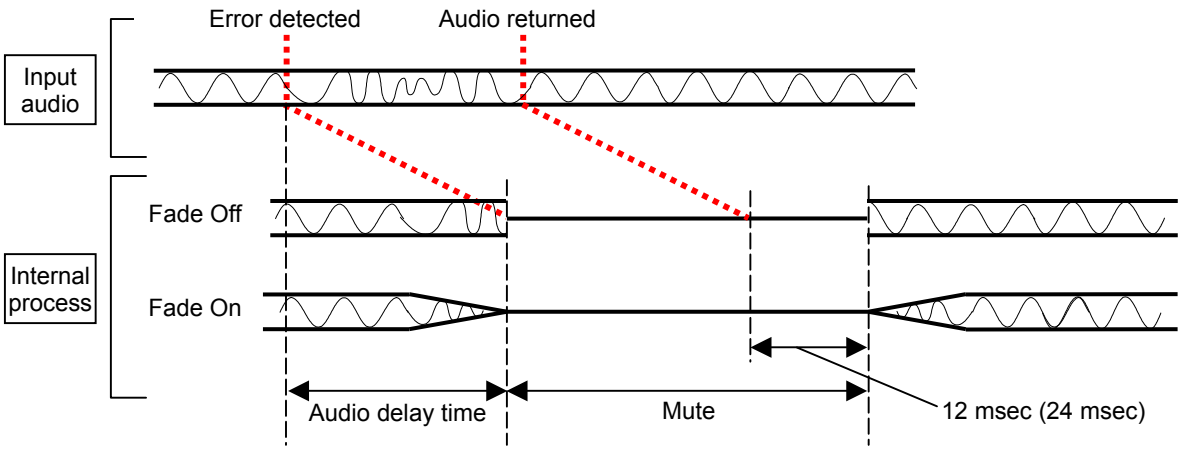
Error detected
Audio returned
Input audio
Internal process
Fade Off
Fade On
Audio delay time
Mute
12 msec (24 msec)

4-4-13. SDI Audio Group

Menu		Default	Setting Range	Description
No.	Item			
27	SDI Audio Group			
27-01 | 27-04	SDI Out Enable Group1 > | SDI Out Enable Group4 >	Disable	Disable, Enable	Enables/disables audio embedding to SDI Group1-4. (*1) Audio cannot be embedded to SD-SDI **Group4** regardless of the setting.
27-05	SDI Out CLK Select Group1 >	Auto	Auto (*3), REF Lock, Ch1/Ch2, Ch3/Ch4	Allows you to select an audio clock signal to be used for each SDI audio group.(*2) Normally, select **Auto**. **Auto**: If a non-PCM audio channel is included in a group, this channel clock is used as the group clock (asynchronous output). If all channels in a group are PCM, the **REF Lock** setting is applied. **REF Lock (Ref Locked)**: Used to properly output PCM audio. **Ch1/2 to Ch15/16**: Used to properly output non-PCM audio (asynchronous). Specify the non-PCM audio channel pair.
27-06	SDI Out CLK Select Group2 >		Auto (*3), REF Lock, Ch5/Ch6, Ch7/Ch8	
27-07	SDI Out CLK Select Group3 >		Auto (*3), REF Lock, Ch9/Ch10, Ch11/Ch12	
27-08	SDI Out CLK Select Group4 >		Auto (*3), REF Lock, Ch13/Ch14, Ch15/Ch16	

(*1) If **SDI Ancillary Mode – HANC (42-01)** is set to **Through**, the **SDI Out Enable Group1-4** settings are ignored and all ancillary data is passed through without being processed.

(*2) Depending on the **SRC Bypass (31-01)** and **SDI Out CLK Select** settings, audio may not properly output.
Audio channel clocks in a group are different; only specified channels are properly output and others are not.
Embedded audio signals are divided into groups of four channels: Group1 (ch1-ch4), Group2 (ch5-ch8), Group3 (ch9-ch12), and Group4 (ch13-ch16). The channels in each group share the same audio clock rate (48 kHz).
PCM audio can be genlocked to the reference signal in the built-in sampling rate converter (SRC) and synchronized with video. However, non-PCM audio (compressed audio such as AC-3) is output asynchronously if it is asynchronous input, because non-PCM audio is bypassed through the SRC.
Be careful that if both PCM and non-PCM audio signals are in the same SDI group, all channels of the group, including PCM audio, are bypassed through the SRC. For example, if ch1/ch2 of the embedded audio are PCM, and ch3/ch4 are non-PCM, route ch1-ch4 to be in the same group. Then ch1-ch4 will be properly output as asynchronous embedded audio.

(*3) The **Auto** setting is available only on UFM-30FS and UFM-30FS-R.

4-4-14. Audio Downmix (UFM-30FS / UFM-30FS-R)

Menu		Default	Setting Range	Description
No.	Item			
28	Audio Down MIX			
28-01	Down MIX Mode Select > (*1)	Stereo	Stereo, Surround, Monaural	Allows you to select the downmix mode.
28-02	Audio Down MIX Bus Assign L> (*2)	SRC Ch1	SRC Ch1 to SRC Ch16	Selects a source channel (L) for downmixing.
28-03	Audio Down MIX Bus Assign R> (*2)	SRC Ch2		Selects a source channel (R) for downmixing.
28-04	Audio Down MIX Bus Assign C> (*2)	SRC Ch3		Selects a source channel (C) for downmixing.
28-05	Audio Down MIX Bus Assign-Ls > (*2)	SRC Ch5		Selects a source channel (Ls) for downmixing.
28-06	Audio Down MIX Bus Assign-Rs > (*2)	SRC Ch6		Selects a source channel (Rs) for downmixing.
28-07	Audio Center Mix Level >	-3 dB	-3 dB, -4.5 dB, -6 dB	Allows you to specify the level of C (Center channel). Choose **-3 dB** if you want to set the output level of channel Center to the same as the level before downmixing. If the audio volume seems to have increased after the center channel was mixed to the left and light channels in downmix, choose **-4.5 dB** or **-6 dB**.
28-08	Audio Surround Mix Level >	-3 dB	-3 dB, -6 dB, -9 dB, 0, Auto	Allows you to specify the level of Ls/Rs (Surround channels). If set to **0** (-∞dB), the audio source is not mixed to these channels. If set to **AUTO**, the level is automatically set by referring to "Current Downmix" (*3) in the ancillary data. (*4)
28-09	Audio DownMIX Master Level >	-3 dB	-3 dB, Auto	Allows you to specify the overall level of downmixed signals. If set to **AUTO**, the **DownMIX Master Level** varies by **Down Mix Mode** and **Surround Mix Level**. (*5)

(*1) See "Block Diagram for Downmixing" in the next page for downmix mode details.

(*2) If audio is not found in the channels selected at **28-02 to 03 Bus Assign-L**, **Bus Assign-R**, **DWNMIXL** and **DWNMIXR** at **21 Audio Output Select** are automatically muted.
If an overlap occurs at the channel selection of **28-01** and **05** or non-PCM audio is selected at **28-01 to 05**, the mark (*) is shown to indicate that the associated channel is disabled. When the mark (*) is displayed, the output is muted even when **DWNMIXL** or **DWNMIXR** is selected at **21 Audio Output Select.**
When **Bypass** is selected at **31-01 SRC Bypass** or non-PCM audio channel is included in an audio group, all channels in the audio group bypass the SRC. Therefore, do not choose a channel for the downmixing source if a non-PCM channel is included in the same group. Otherwise, downmixing may not be properly performed.

(*3) "Current Downmix" and "Current Audio Mode" are included in the ancillary data compliant with ARIB STD-B39 (the inter-stationary control data).

(*4) When **28-08 Audio Surround Mix Level** is set to **Auto** and "Current Downmix" data is not found in the ancillary data, the level remains unchanged. If there is no previous data to compare to, for example at startup, it is automatically set to **-3 dB.** The "Current Downmix" data is monitored and displayed at **80-09 SDI IN1 Down Mix Level** and **80-10 SDI IN2 Down Mix Level**.

(*5) **Master level** is set as shown in the table below when set to **AUTO**.

Down Mix Mode \ Surround Mix Level	-3 dB	-6 dB	-9 dB	0 (-∞dB)
Stereo	Approx. -7.7 dB	Approx. -6.9 dB	Approx. -6.3 dB	Approx. -4.6 dB
Surround	Approx. -9.9 dB	Approx. -8.7 dB	Approx. -7.7 dB	Approx. -4.6 dB
Monaural	Approx. -12.9 dB	Approx. -12.0 dB	Approx. -11.4 dB	Approx. -9.5 dB

◆ Block Diagram for Downmixing

Surround Mix (Lt/Rt)
This mode converts two surround channels (Ls/Rs) to monaural audio, shifts the phase to 180 degrees and adds it to the L and R channels. (The LFE channel is not a downmixing source.)

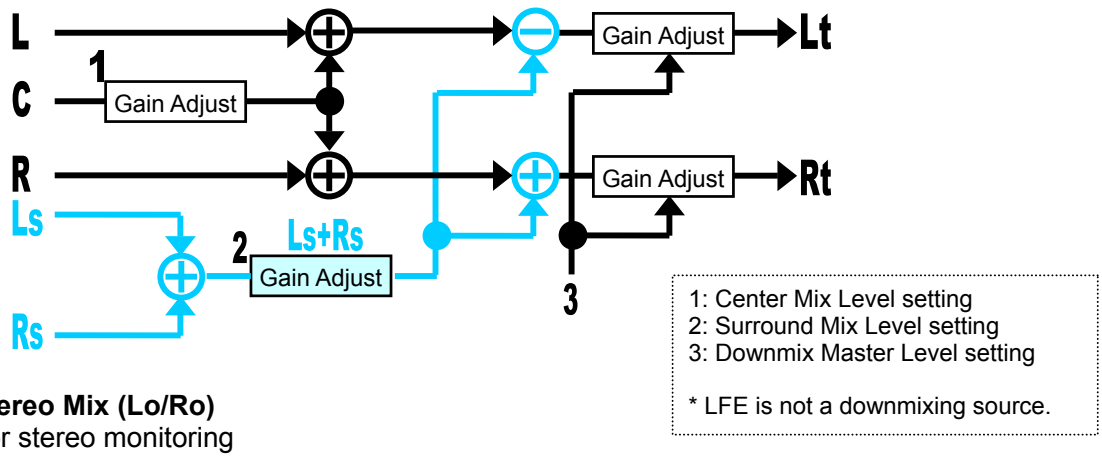

Stereo Mix (Lo/Ro)
For stereo monitoring

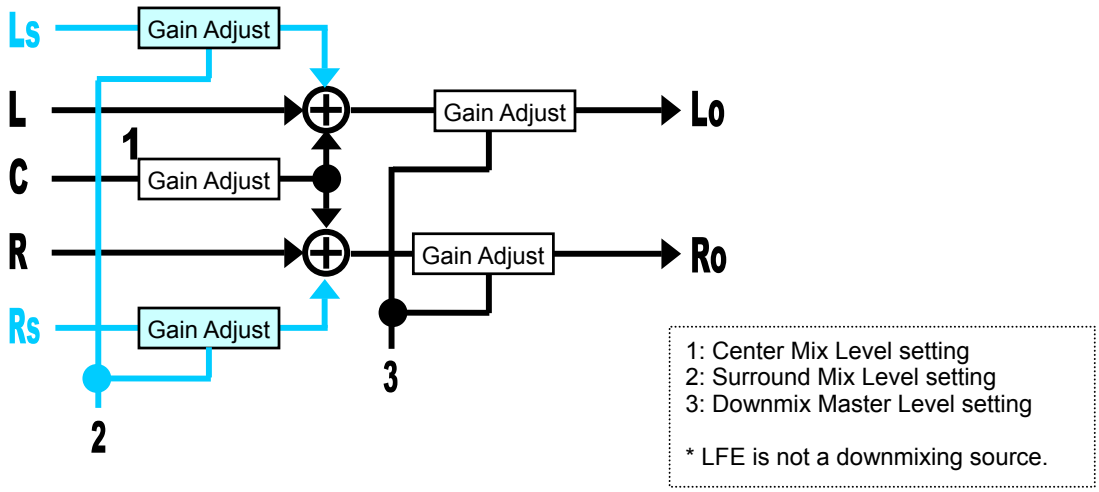

Monaural Mix (Lo+Ro/Lo+Ro)
For monaural monitoring

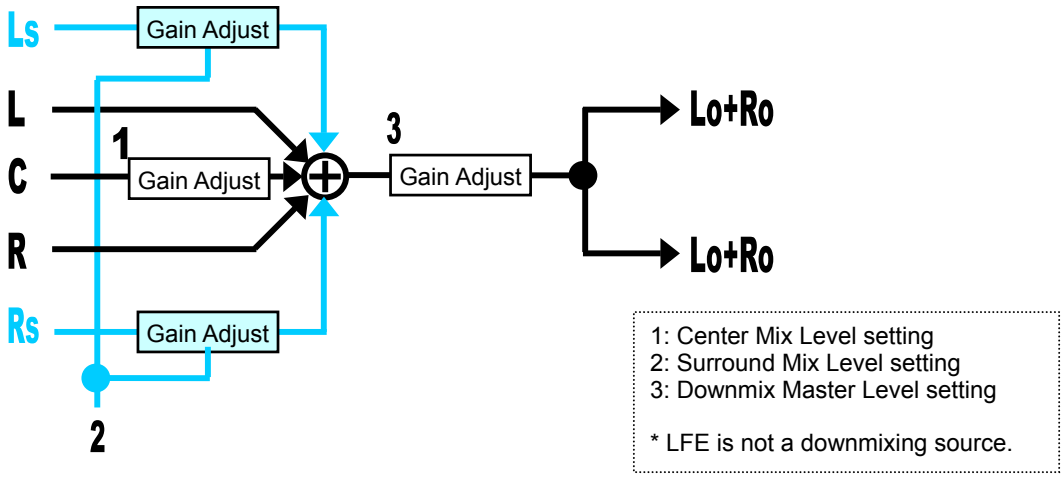

4-4-15. Silence

Menu		Default	Setting Range	Description
No.	Item			
30	Silence Setting			
30-01	Silence Detect Time >	2 sec	1-10 sec	Allows you to set the time required to determine that audio is silent. If audio has gone silent and the time set here has passed, the audio is considered to be silent (*1)
30-02	Silence Level >	-72 dB	-72 dB, -66 dB, -60 dB, -54 dB, -48 dB	Allows you to set the level required to determine that the audio is silent. (*1)

(*1) Silence is detected based on this menu setting and displayed in **81 SDI Audio Status**.

4-4-16. SRC Bypass

Menu		Default	Setting Range	Description
No.	Item			
31	SRC Bypass Setting			
31-01	SRC Bypass >	Auto	Auto, Bypass (*1)	Allows you to enable/disable the audio group SRC bypass. **Auto**: All audio groups (channels) automatically go through the SRC, if a non-PCM audio channel is not included in the audio group. **Bypass**: All audio channels bypass the SRC.

(*1) To use non-synchronized audio by bypassing the SRC, set to **Bypass**. In this case, also set the reference standard at **27-05 to 08 SDI OUT CLK Select Group1-4.**

4-4-17. AES Input/Output Mode Select (UFM-30FS-DA)

Menu		Default	Setting Range	Description
No.	Item			
33	AES Input/Output Mode Select			
33-01	AES Input/Output Select > (*1)	Input	Input, Output	Allows you to select AES Input or AES output. **Input**: AES 4 inputs (8 channels) are available. **Output**: AES 4 outputs (8 channels) are available.

(*1) AES input and AES output cannot be used at the same time.

4-4-18. Audio Input Select (UFM-30FS-DA)

This menu is effective only when **Input** is selected for **33-01 AES Input/Output Select**. The default values are applied regardless of settings when **Output** is selected.

Menu		Default	Setting Range	Description
No.	Item			
34	Audio Input Select			
34-01	Audio Input Select Group1 >	SDI G1	SDI G1, AES Ch1-4, AES Ch5-8	Allows you to select 16 channels into 4 groups from 16 channels of embedded audio and 8 channels of AES audio. **SDI G1**: SDI Audio Group1 **SDI G2**: SDI Audio Group2 **SDI G3**: SDI Audio Group3 **SDI G4**: SDI Audio Group4 **AESCh1-4**: AES input channels 1-4 **AESCh5-8**: AES input channels 5-8
34-02	Audio Input Select Group2 >	SDI G2	SDI G2, AES Ch1-4, AES Ch5-8	
34-03	Audio Input Select Group3 >	SDI G3	SDI G3, AES Ch1-4, AES Ch5-8	
34-04	Audio Input Select Group4 >	SDI G4	SDI G4, AES Ch1-4, AES Ch5-8	

An error message "**AES Output** mode selected" appears when there is any attempt to change **Audio Input Select** in **AES Output** mode.

4-4-19. AES Output Select (UFM-30FS-DA)

This menu is effective only when **Output** is selected for **33-01 AES Input/Output Select**. The AES output channels are selected from the 16 channels selected in **21 Audio Output Select**.

Menu		Default	Setting Range	Description
No.	Item			
35	AES Output Select			
35-01	AES Output Select ch1/2 >	Ch 1/2	Ch1/2 to Ch15/16	Allows you to select channels sent to AES outputs.
35-02	AES Output Select ch3/4 >	Ch 3/4		
35-03	AES Output Select ch5/6 >	Ch 5/6		
35-04	AES Output Select ch7/8 >	Ch 7/8		

An error message "**AES Input** mode selected" appears when there is any attempt to change **AES Output Select** in **AES Input** mode. The values set in **AES Output** mode are stored in the internal memory.

4-4-20. AES Audio Delay (UFM-30FS-DA)

This menu is effective only when **Input** is selected for **33-01 AES Input/Output Select**.
In **AES Output** mode, adjust the AES audio delay using **23 SDI Audio Delay ch1-ch8**. Be careful that, in this case, the same delay value is applied to both the SDI audio and AES audio.

Menu		Default	Setting Range (Steps)	Description
No.	Item			
36	AES Audio Delay			
36-01	AES Audio Delay Unit >	16 ms	+2 to +1000 ms (1 ms)	Allows you to apply a common AES audio delay to all AES output channels.
36-02	AES Audio Delay Offset ch1 >			Allows you to adjust the delay for each channel by adding the adjustments to AES Audio Delay Unit.
36-03	AES Audio Delay Offset ch2 >			
36-04	AES Audio Delay Offset ch3 >			
36-05	AES Audio Delay Offset ch4 >			
36-06	AES Audio Delay Offset ch5 >			
36-07	AES Audio Delay Offset ch6 >			
36-08	AES Audio Delay Offset ch7 >			
36-09	AES Audio Delay Offset ch8 >			

The total audio delay equals the **AES Audio Delay Offset** value, which is calculated by referring to **AES Audio Delay Unit**. If the total value exceeds the range 2 to 1,000 msec, it is automatically set to the minimum or maximum allowed value. The minimum value is 2 msec including internal processing delay.

If different values are set for an L/R stereo pair (such as ch1 and ch2) of non-PCM audio, the value of channel R will be automatically changed to match that of channel L.

To maintain lip sync, see the value of **80-07 Video I/O Delay**.

An error message "AES Output mode selected" appears when there is any attempt to change **AES Audio Delay** in **AES Output** mode. The values set in **AES Input** mode are stored in the internal memory.

If **AES Audio Delay Unit** is changed, the delay intervals of AES audio channels are changed accordingly, maintaining the differences among the channels. If the total value exceeds the range 2 to 1,000 msec, an asterisk (*) appears and it is automatically set to the minimum or maximum allowed value.

4-4-21. SDI ACS non-PCM Settings (UFM-30FS/FS-R)

Menu		Default	Setting Range	Description
No.	Item			
37	SDI ACS non-PCM Setting			
37-01	ACS non PCM Setting Ch1/2 >	SRC BYPS	SRC BYPS, PCM, MUTE	This setting is effective when the Channel Status **non-PCM flag** in an SDI input audio feed is set to "**1**". (*1) Settings are applied to each stereo pair. **SRC BYP**: Audio channels are processed as non-PCM, SRC is bypassed (*2) and asynchronous clocking is set to **SDI Out CLK Select**. (*3) **PCM**: Audio channels are processed as PCM (normal audio) and go through SRC(*2). **SDI Out CLK Select** is set to **Ref Locked**. (*3) **MUTE**: Audio channels are set to silent. (*4)
37-02	ACS non PCM Setting Ch3/4 >			
37-03	ACS non PCM Setting Ch5/6 >			
37-04	ACS non PCM Setting Ch7/8 >			
37-05	ACS non PCM Setting Ch9/10 >			
37-06	ACS non PCM Setting Ch11/12 >			
37-07	ACS non PCM Setting Ch13/14 >			
37-08	ACS non PCM Setting Ch15/16 >			

(*1) To read the nonPCM flag value, use a waveform monitor or optional UFM-30CTL module (Version 2.14 or higher).
(*2) If **SRC Bypass (31-01)** is set to **Auto**.
(*3) If **SDI Out CLK Select (27)** is set to **Auto**.
(*4) If **Audio Err Sense (26-01)** is set to **Disable**, **MUTE** is ineffective.

4-4-22. SDI Channel Status Forced to Be 20bit/PCM (UFM-30FS-DA)

Use this function only when a malfunction such as noisy or muted output occurs. **Do not change** this setting when audio is properly being output.

Menu		Default	Setting Range	Description
No.	Item			
37	ACS Forced 20bit/PCM Setting			
37-01	ACS Forced 20bit/PCM Ch1/2 >	SENSE	SENSE, 20bit/PCM	**SENSE**: Automatically detects embedded audio status. (Normal setting) **20bit/PCM**: Forcibly sets input channel status of embedded audio to "20bit, PCM".
37-02	ACS Forced 20bit/PCM Ch3/4 >			
37-03	ACS Forced 20bit/PCM Ch5/6 >			
37-04	ACS Forced 20bit/PCM Ch7/8 >			
37-05	ACS Forced 20bit/PCM Ch9/10 >			
37-06	ACS Forced 20bit/PCM Ch11/12 >			
37-07	ACS Forced 20bit/PCM Ch13/14 >			
37-08	ACS Forced 20bit/PCM Ch15/16 >			

The UFM-30FS-DA processes audio based on the Audio Channel Status (ACS) value added to audio. If the Audio Channel Status is incorrect, audio can be incorrectly processed In such case, set this item to **20bit/PCM** to pass through audio properly.

4-4-23. SDI Validity Bit Setting (UFM-30FS/FS-R)

Menu		Default	Setting Range	Description
No.	Item			
38	Validity Bit Setting			
38-01	Validity Bit Setting Ch1/2 >	SRC BYPS	SRC BYPS, PCM, MUTE	This setting is effective when the **Validity Bit flag** in an SDI input audio is set to "**1**". (*1) Settings are applied to each stereo pair. **SRC BYP**: Audio channels are processed as non-PCM, SRC is bypassed (*2) and asynchronous clocking is set to **SDI Out CLK Select**. (*3) **PCM**: Audio channels are processed as PCM (normal audio) and go through SRC(*2). **SDI Out CLK Select** is set to **Ref Locked**. (*3) **MUTE**: Audio channels are set to silent. (*4)
38-02	Validity Bit Setting Ch3/4 >			
38-03	Validity Bit Setting Ch5/6 >			
38-04	Validity Bit Setting Ch7/8 >			
38-05	Validity Bit Setting Ch9/10 >			
38-06	Validity Bit Setting Ch11/12 >			
38-07	Validity Bit Setting Ch13/14 >			
38-08	Validity Bit Setting Ch15/16 >			

(*1) To read the nonPCM flag value, use a waveform monitor or optional UFM-30CTL module (Version 2.14 or higher).
(*2) If **SRC Bypass (31-01)** is set to **Auto**.
(*3) If **SDI Out CLK Select (27)** is set to **Auto**.
(*4) If **Audio Err Sense (26-01)** is set to **Disable**, **MUTE** is ineffective.

4-4-24. SDI Validity Bit Mask (UFM-30FS-DA)

Use this function only when a malfunction such as noisy or muted output occurs. **Do not change** this setting when audio is properly being output.

Menu		Default	Setting Range	Description
No.	Item			
38	ADP Validity Bit Mask Setting			
38-01	ADP Validity Bit Mask Ch1/2 >	Through	Through, VbitMask	**Through**: Determines data validity using the Validity Bit of input audio. (Normal setting) **V(Validity)bitmask**: Masks the Validity Bit and assumes input audio data to be valid.
38-02	ADP Validity Bit Mask Ch3/4 >			
38-03	ADP Validity Bit Mask Ch5/6 >			
38-04	ADP Validity Bit Mask Ch7/8 >			
38-05	ADP Validity Bit Mask Ch9/10 >			
38-06	ADP Validity Bit Mask Ch11/12 >			
38-07	ADP Validity Bit Mask Ch13/14 >			
38-08	ADP Validity Bit Mask Ch15/16 >			

The UFM-30FS-DA determines audio data validity using the Validity Bit (V Bit). If the Validity Bit is incorrect, audio can be incorrectly processed. In such case, set this item to **VbitMask** to pass through audio properly.

4-4-25. Disabling Phase Alignment Among Audio Groups

Use this function only when a malfunction such as noisy or muted output occurs. **Do not change** this setting when audio is properly being output.

Menu		Default	Setting Range	Description
No.	Item			
39	Alignment Between Audio Group			
39-01	Alignment Between Audio Group>	Enable	Enable, Disable	**Enable**: Enables phase alignment among audio groups. (Normal Setting) **Disable**: Disables phase alignment among audio groups.

The phases among audio groups are automatically aligned at input. But when an abnormal or irregular audio signal is inserted into an unused group in UFM-30FS/30FS-R/30FS-DA, audio is improperly output in some cases due to the auto phase alignment. In such case, this function helps to output proper audio by disabling phase alignment among audio groups.

Note that when changing the setting from **Disable** to **Enable**, to align all audio group phases, the sound is briefly muted.

4-4-26. System Settings

Menu		Default	Setting Range	Description
No.	Item			
40	System Setting			
40-01	Input Select > (*1)	SDI In1	SDI In1, SDI In2	Allows you to select an input channel.
40-02	System Format >	Auto DET	Auto DET, 525/60, 625/50, 1080/59i, 1080/50i, 720/59p, 720/50p (*2)	Allows you to select a format to be used for the system. **Auto DET** or a specific format can be selected.
40-03	Sync Mode >	FRM Sync	FRM Sync, LS(1H) (*3), LS(AUTO) (*3), Input (*4)	Allows you to select a sync mode. **FRM Sync (Frame sync):** Locks the video signal to the genlock signal both in horizontal and vertical phase. Effective for both synchronous and asynchronous input. **LS (1H)(1H Line sync):** Locks the video signal to the genlock signal in horizontal phase from -1/2H to +1/2H and outputs with 1H delay. Effective only when the video signal and genlock signal are synchronous. Function as a 1H AVDL. **LS(AUTO) (Multi-line AVDL)**: Locks the video signal to the genlock signal and outputs the video with 1H delay(*5) referring to the genlock. Effective only when the video signal and genlock signal are synchronous. A disturbance may occur when switching video signals. (*6) **Input (Input lock):** Locks the video signal to the sync pulse in the video signal. The amount of delay can be set at **System Phase** and **Frame Delay**. However, the minimum delay is limited to 400 clk (at 74 MHz (HD) and 27 MHz(SD)) for all formats. In this case, reference input is not used.
40-04	HD SDI Input ACLK Select > (*1)	Auto	Auto, Sync SDI	Sets the embedded audio receiving clock for HD-SDI input. **Auto:** Uses the audio clock phase information in HD-SDI embedded audio and de-embeds 4 audio groups from SDI streams. Synchronous and asynchronous audio de-embedding is possible for each group. (*7) If though there is an error in the information or signal, audio groups are automatically processed as synchronous audio. **Sync SDI:** Does not use the audio clock phase information in HD-SDI embedded audio and all audio groups are always processed as synchronous audio. (*8)

(*1) This item is not available on UFM-30FS-DA.
(*2) The following 12 standards are available if the standard support option is installed.

720/60p,
1080/60i, /30p, /29.97p, /25p, /24p, /23.98p, /24PsF, /23.98PsF, /60p, /59.94p, /50p

Although the additional three standards, 1080/30PsF, /29.97PsF and /25PsF, are available, they are treated and displayed as 1080/60i, /59.94i and 50i, respectively, on the UFM-30FS, UFM-30FS-R and UFM-30FS-DA.

* Refer to the table on the next page about the relationships between reference and SDI signal standards.

(*3) If **Sync Mode** is set to **Line Sync (LS)**, **02-02 V Position, 02-03 Frame Delay** and **03-01 Freeze ON/OFF** are disabled. If **40-02 Video Loss Mode** is set to **Auto Freeze**, **04-03 Back Color** is performed

(*4) If **40-02 Video Loss Mode** is set to **Auto Freeze**, **04-03 Back Color** is performed

(*5) The output video phase can be changed by **System Phase** (default: V=1 / H=0).

(*6) When an upstream router is configured and UFM-30FS receives video signals of different standards from it, video or audio disturbances during signal switching will not occur if the phase difference between the video and reference signals is **within** the range as shown in the table below. A disturbance will occur if it exceeds the range.

Video format	Signal phase difference of video relative to the reference
SD	-1H (differing several lines depending on the standard) to +1/2H
HD	-5H (differing several lines depending on the standard) to +1/2H

(*7) SD-SDI audio signals are always processed as reference locking signal regardless of the menu selection.

(*8) Use this function only when audio is improperly output and non-PCM audio is not input.

➢ Relationships between reference signal and SDI signal standards.

	SDI	1080				720	SD	3G
REF Signal		/59.94i	/23.98PsF	/29.97p	/23.98p	/59.94p	525/60	/59.94p
1080	/59.94i	FL	F	FL	F	FL	FL	FL
	/23.98PsF	F	FL	F	FL	F	F	F
	/29.97p	FL	F	FL	F	FL	FL	FL
	/23.98p	F	FL	F	FL	F	F	F
720	/59.94p	FL	F	FL	F	FL	FL	FL
SD	NTSC	FL	F	FL	F	FL	FL	FL

	SDI	1080						720		SD	3G	
REF Signal		/60i	/50i	/24PsF	/30p	/25p	/24p	/60p	/50p	625/50	/60p	/50p
1080	/60i	FL	F	F	FL	F	F	FL	F	F	FL	F
	/50i	F	FL	F	F	FL	F	F	FL	FL	F	FL
	/24PsF	F	F	FL	F	F	FL	F	F	F	F	F
	/30p	FL	F	F	FL	F	F	FL	F	F	FL	F
	/25p	F	FL	F	F	FL	F	F	FL	FL	F	FL
	/24p	F	F	FL	F	F	FL	F	F	F	F	F
720	/60p	F	F	F	F	F	F	FL	F	F	FL	F
	/50p	F	FL	F	F	F	F	F	FL	F	F	FL
SD	PAL	F	FL	F	F	FL	F	F	FL	FL	F	FL

FL: Both **Frame Sync** and **Line Sync** (LS) are available.
F: Only **Frame Sync** is available. (Output vertical phases are unsynchronized.)

1080/30PsF, /29.97PsF and /25PsF are treated and displayed as 1080/60i, /59.94i and 50i, respectively.

4-4-27. System Phase

Menu		Default	Setting Range	Description
No.	Item			
41	System Phase			
41-01	System Phase H >	0 CLK	(*1) (*2)	Allows you to adjust video phase. If **Frame Sync** or **Line Sync (LS)** is selected in 40-03 **Sync Mode**, aligns with genlock signal. If **Input lock** is selected, aligns with video input signal. The settings are adjusted in clocks and lines of the system format, instead of the genlock signal. For example, if 1080/59.94i video is locked to B.B., the system phase settings are adjusted in clocks and lines of the 1080/59.94i format. The setting ranges are as shown below. -1100 to 0 to +1100 clk (horizontal) -563 to 0 to +563 Line (vertical)
41-02	System Phase V >	0 Line	(*1) (*2)	

(*1) The setting range varies depending on the format. See the table "Video Phase Setting Range" on page 15 for details.

(*2) If **40-03 Sync Mode** is set to **Input**, **02-03 Frame Delay** is set to **Off**, **System Phase V** is set to **0Line**, and **System Phase H** is set to less than 400clk, the indication **"Minimum"** (minimum delay) will appear and the system delay will set itself to 400clk.

4-4-28. SDI Ancillary Mode

Menu		Default	Setting Range	Description
No.	Item			
42	SDI Ancillary Mode			
42-01	SDI HANC Mode >	OverWRIT	Delete, OverWRIT, Through (*1)	**Delete:** Deletes all ancillary data. Audio data packets will be processed according to the **SDI Out Enable** (27) settings. **OverWRIT (Overwrite):** Overwrites audio data packets. Other packets will be passed through. **Through:** Passes through ancillary data without processing. If **H ANC Mode** is set to **Through**, **SDI Output Enable** settings are ineffective.
42-02	SDI VANC Mode >	Through	Delete, Through (*1)(*2)	

(*1) TRS (HD/SD), line number, CRC (HD), and EDH (SD) will be overwritten regardless of the setting. If 60-01 **Video Test Signal** is enabled (set to other than Off), both H and V Ancillary Modes are disabled (Delete).

(*2) Switching line data are all masked. But if **H ANC** and **V ANC Modes** are both set to **Through**, switching line data can be passed through.

4-4-29. Test Signal

Menu		Default	Setting Range	Description
No.	Item			
60	Test Signal			
60-01	Video Test Signal >	Off	Off, Full CB, SMPTE CB, RAMP	Allows you to output a test signal. The test signal appears in full screen regardless of the **Video** menu setting.
60-02	Audio Test Signal >		Off, 500Hz, 1kHz	Allows you to output an audio test signal to all output channels. No test signal is output, if 42-01 **SDI HANC Mode** is set to **Through** or **27-01 to 04 SDI Out Enable Group1-4** is set to **Disable**.

4-4-30. Event Memory

Menu		Default	Setting Range	Description
No.	Item			
61	Event Memory			
61-01	Start Up Event Load >(*1)	Last Set	Last Set, VID FRMT, Default, Event 1-50	Allows you to select an event to load when booted. **Last Set:** Loads the last settings before booting. **VID FRMT (Video Format):** Detects the last video input format before booting and loads the settings specifically defined for the video format. **Default:** Loads the default settings. **Event 1-50:** Loads the settings saved to Event 1-50.
61-02	Auto Event Load >(*1)	Disable	Disable, Enable	**Enable:** Automatically loads the settings specifically defined for the video format.
61-03	Event Load >(*1)	-	Default, VID FRMT, Event 1-50	**Default:** Resets to the default settings. **VID FRMT:** Loads the settings specifically defined for the video format. **Event 1-50:** Loads the settings selected from Event 1-50. Press the **UNITY** switch to load the selected event.
61-04	Event Save >(*1), (*2)	-	VID FRMT, Event 1-50	**VID FRMT (Video Format):** Saves the settings specifically defined for the video format currently operated. **Event 1-50:** Saves the settings to Event 1 to 50. Press the **UNITY** switch to save the selected event.

(*1) If **Auto Event Load** is set to **Enable**, **Event Load** and **Event Save** cannot be changed. If UFM-30FS is powered off and on again while **Auto Event Load** is set to **Enable**, priority is given to **Auto Event Load** over **Start Up Event Load**. If **Auto Event Load** is set to **Enable**, **Start Up Event Load**, **Event Load**, and **Event SAVE** cannot be changed and an error message "**Auto Event Load Enable!**" appears.

(*2) **03-01 Freeze ON/OFF** and **05-01 Bypass/Operate** are not saved to the event.

*The default settings are saved in **Event 1-50** and **VID FRMT** at the factory.

NOTE
About automatic saving The UFM-30FS/UFM-30FS-R/UFM-30FS-DA automatically saves the last settings. After changing settings, wait **at least 5 seconds** before powering off. Otherwise, the settings may not be saved.

4-4-30-1. About VID FRMT (VIDEO FORMAT) Event Memory

On the UFM-30FS/UFM-30FS-R/UFM-30FS-DA, an event memory is provided for each video input format, and the specifically defined settings can automatically be loaded when the video input format is changed.

Saving Settings for a Specific Video Format (525/60 in the example below)

1. Input a 525/60 signal to the **SDI1** (**SDI IN** on UFM-30FS-DA) connector on the UFM-30FS/UFM-30FS-R/UFM-30FS-DA.
2. Check if **Input Select** is set to **1** on the UFM-30FS/UFM-30FS-R.
3. Change the settings as required.
4. Check if **Auto Event Load** is set to **Disable**.
5. Select **VID FRMT** in **Event Save**. Press the **UNITY** switch to save the settings to the event memory provided for 525/60.

* To save other format settings such as those for 625/50, 1080/59i, 1080/50i, 720/59p, and 720/50p, etc., input the signal to **SDI1** (**SDI IN** on UFM-30FS-DA) and repeat steps 1 to 5.

* **Input Select** described in step 2 can also be set to **2** on the UFM-30FS/UFM-30FS-R. In this case, input the signal to **SDI2**.

Manually loading an Event for a Specific Video Format

1. Input a signal whose format settings have been saved to an event, to UFM-30FS/UFM-30FS-R/UFM-30FS-DA.
2. Check if **Auto Event Load** is set to **Disable**.
3. Select **VID FRMT** in **Event Load**. Press the **UNITY** switch to load the event of the specified format.

Automatically loading an Event for a Specific Video Format

Set **Auto Event Load** to **Enable**. The input format is automatically detected and the event of the format is loaded.

NOTE
If **Auto Event Load** is turned on, the event is loaded only once when the input format is changed.

4-4-31. Front Panel Settings

Menu		Default	Setting Range	Description
No.	Item			
63	Front Panel Setting			
63-01	Front Brightness >	50%	25%, 50%, 75%, 100%	Allows you to select the brightness of the front panel display.
63-02	Panel Lock >	Operate	Operate, Lock	Setting to **Lock** inhibits operation using the front panel. Hold down the **Push** switch for about 2 seconds to release **Panel Lock** (set to Operate).

4-4-32. System Status (Display Only)

Menu		Description
No.	Item	
80	System Status	
80-01	Operation Status >	Displays the genlock status. **Loss:** No video input signal present. **Lock:** Video input signal locked to the genlock signal. **Unlock:** Input signal cannot be locked to the genlock signal. **Bypass:** Video input signal bypassed. (UFM-30FS-R only)
80-02	Selected SDI Input > (*1)	Displays the selected input channel. Displays **"Bypass"** when set to **Bypass**. (UFM-30FS-R only)
80-03	Reference Format >	Displays the genlock signal format.
80-04	SDI IN1 Format >	Displays the video signal format input to SDI IN1. Displays **"Bypass"** when set to **Bypass**. (UFM-30FS-R only)
80-05	SDI IN2 Format > (*1)	Displays the video signal format input to SDI IN2.
80-06	Input to Reference Phase >	Displays the phase difference between the video input signal and genlock signal. The status appears as ****Line **Clock **µsec** (or msec). The total phase difference appears in ****µsec**.
80-07	Video I/O Delay >	Displays the phase difference between the video input signal and SDI output signal. The status appears as ****Frame **Line **Clock **µsec** (or msec). The total delay duration appears in ****µsec**.
80-08	SDI IN1 Down Mix Level > (*1)	Displays the "Current Downmix" value in SDI IN 1 and SDI IN 2 (*2) -3 dB, -6 dB, -9 dB, 0 (-∞dB), None, Unknown
80-09	SDI IN2 Down Mix Level > (*1)	

(*1) This item is not displayed on the UFM-30FS-DA

(*2) The value displayed here is applied, if **28-08 Audio Surround Mix Level** is set to **Auto.** If you want to use another value, set at **28-08 Audio Surround Mix Level**.) "Current Downmix" and "Current Audio Mode" are included in the ancillary data compliant with ARIB STD-B39 (the inter-stationary control data).

4-4-33. SDI Audio Status (Display Only)

Menu		Description
No.	Item	
81	SDI Audio Status	
81-01 | 81-16	SDI Input Status ch1 > | SDI Input Status ch16 >	Displays the SDI embedded audio status. **Loss:** No audio is present. **PCM, PCM (A):** Uncompressed linear PCM audio is present. **Silence, Silence (A):** Linear PCM audio is present but silent. **NonPCM, NonPCM (A):** Compressed audio such as AC-3 is present. **Unknown:** Unknown format.

"(A)" represents the asynchronous audio input.

4-4-34. AES Audio Status (Display Only)(UFM-30FS-DA)

This menu is effective only when **Input** is selected for 33-01 **AES Input/Output Select**.

Menu		Description
No.	Item	
82	AES Audio Status	
82-01 | 82-16	AES Input Status ch1/2 > | AES Input Status ch7/8>	Displays the AES audio status. **Loss:** No audio is present. **PCM:** Uncompressed linear PCM audio is present. **NonPCM:** Compressed audio such as AC-3 is present.

An error message "AES Output mode selected" appears when there is any attempt to display **AES Audio Status** in **AES Output** mode.

4-4-35. Module Information (Display Only)

Menu		Description
No.	Item	
83	Module Information	
83-01	Slot Number	Displays the slot number where the module is installed.
83-02	CPU Version Information	Displays the CPU version.
83-03	FPGA Version Information	Displays the FPGA version.
83-04	Option Information	Displays the installed optional information.

5. Block Diagram

5-1. VIDEO (UFM-30FS)

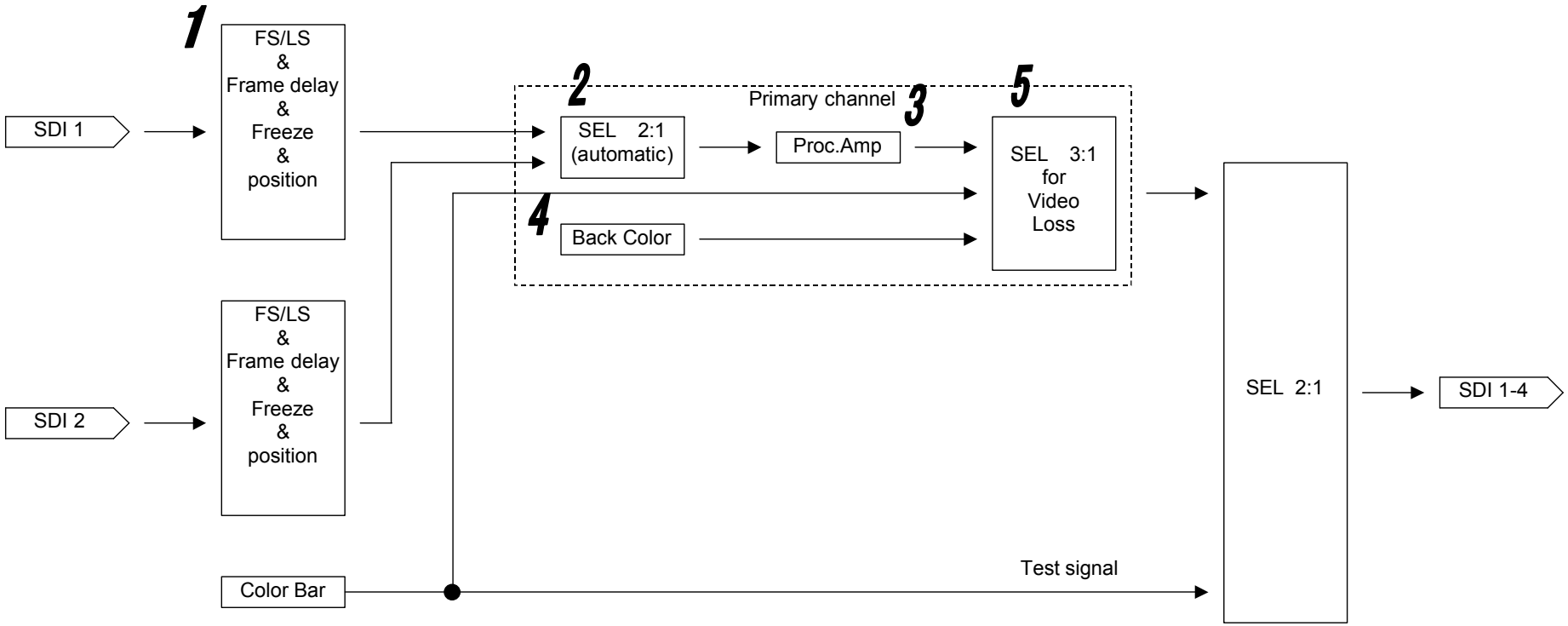

No.	Setting	Menu No.
1	Video display settings	01 to 03, 40-02, 40-03
2	Video input selection	40-01
3	Process amplifier	00
4	Background setting	04-03
5	Video loss setting	04-02

5-2. VIDEO (UFM-30FS-R)

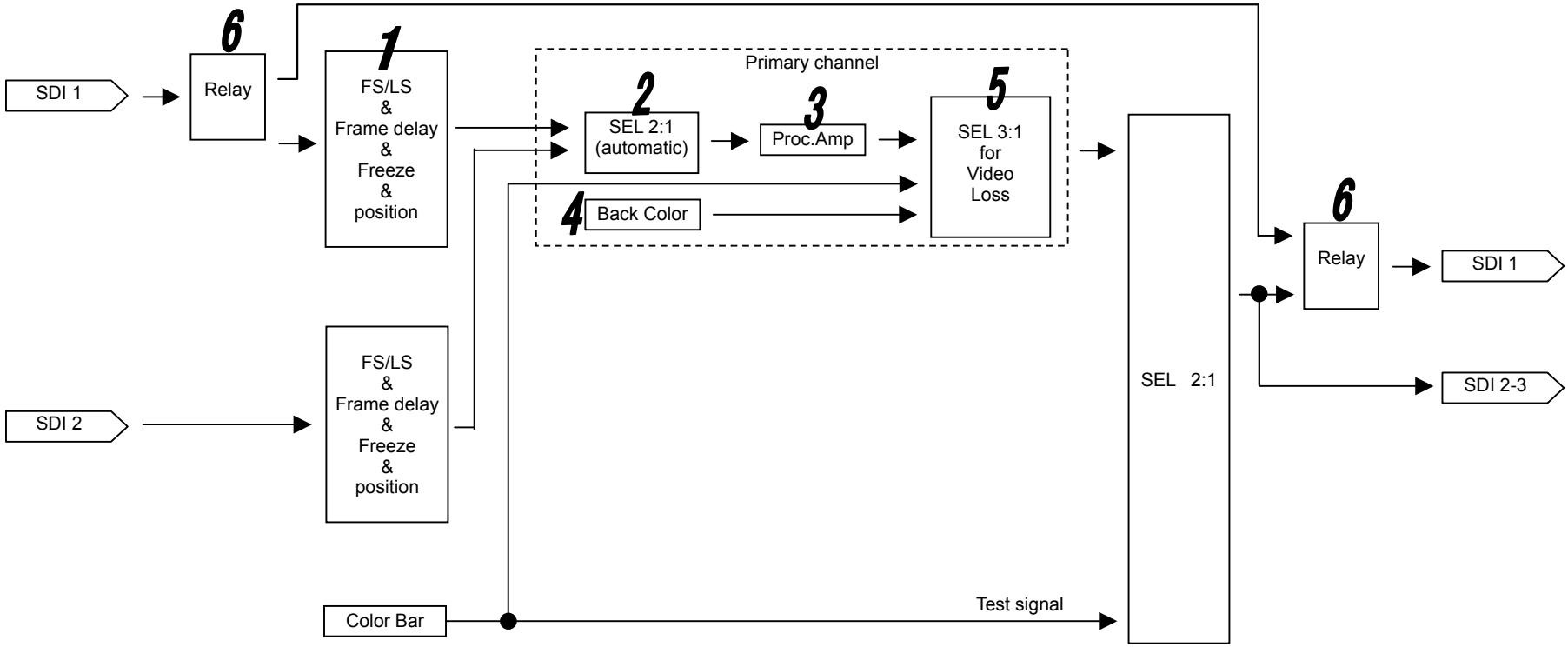

No.	Setting	Menu No.
1	Video display settings	01 to 03, 40-02, 40-03
2	Video input selection	40-01
3	Process amplifier	00
4	Background setting	04-03
5	Video loss setting	04-02
6	Bypass setting	05-01

5-3. VIDEO (UFM-30FS-DA)

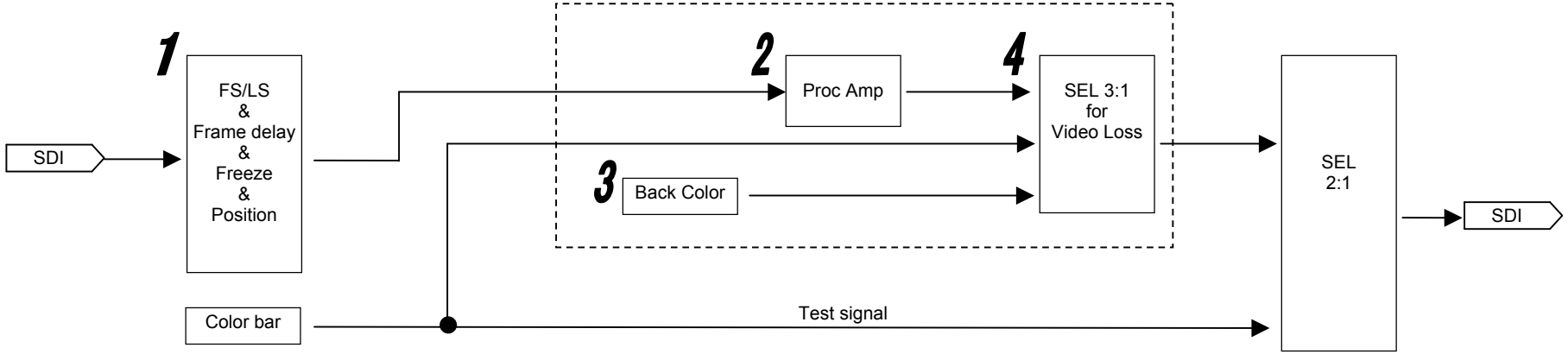

No.	Setting	Menu No.
1	Video display settings	01 to 03, 40-02, 40-03
2	Process amplifier	00
3	Background setting	04-03
4	Video loss setting	04-02

5-4. AUDIO (UFM-30FS)

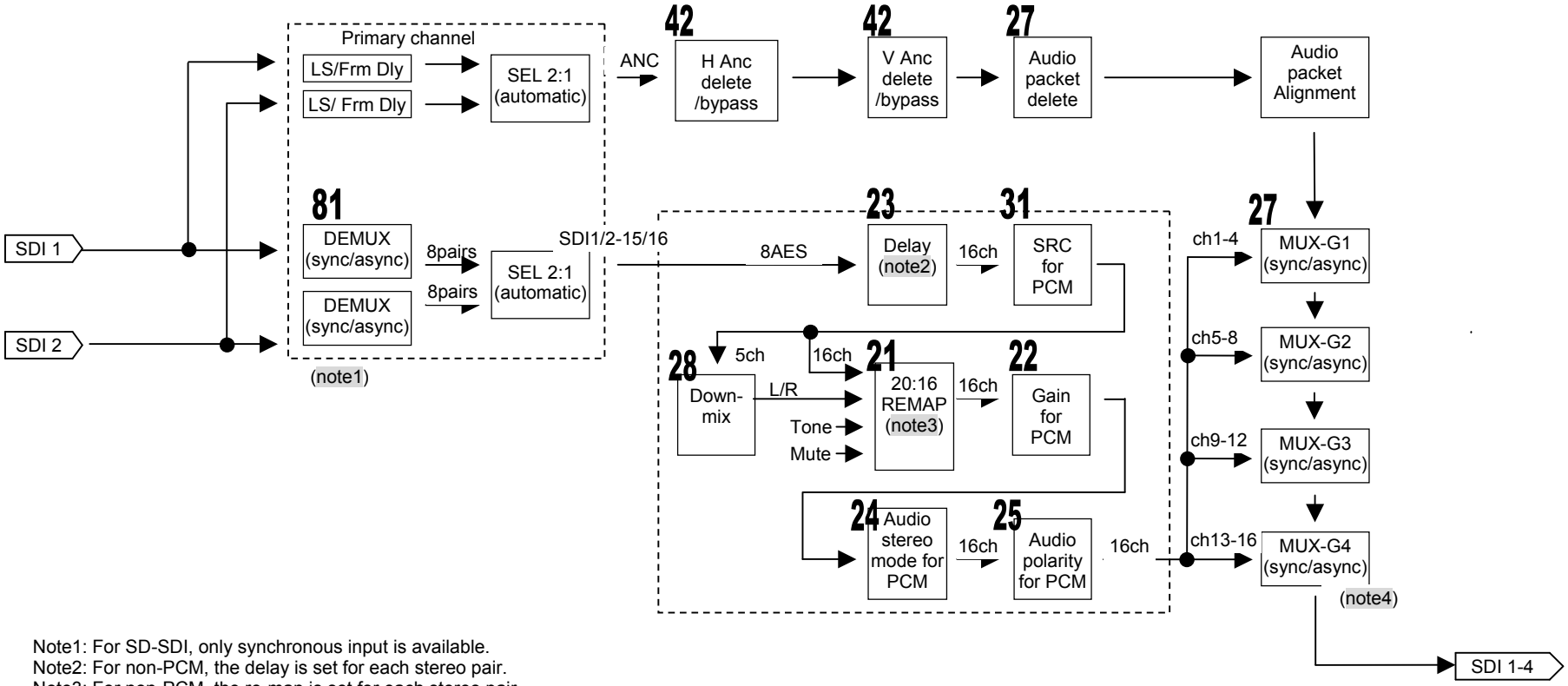

Note1: For SD-SDI, only synchronous input is available.
Note2: For non-PCM, the delay is set for each stereo pair.
Note3: For non-PCM, the re-map is set for each stereo pair.
Note4: For SD-SDI, only synchronous output is available. SD-SDI audios cannot be output to Group4.

The numbers in the figure above indicate the menu number.

5-5. AUDIO (UFM-30FS-R)

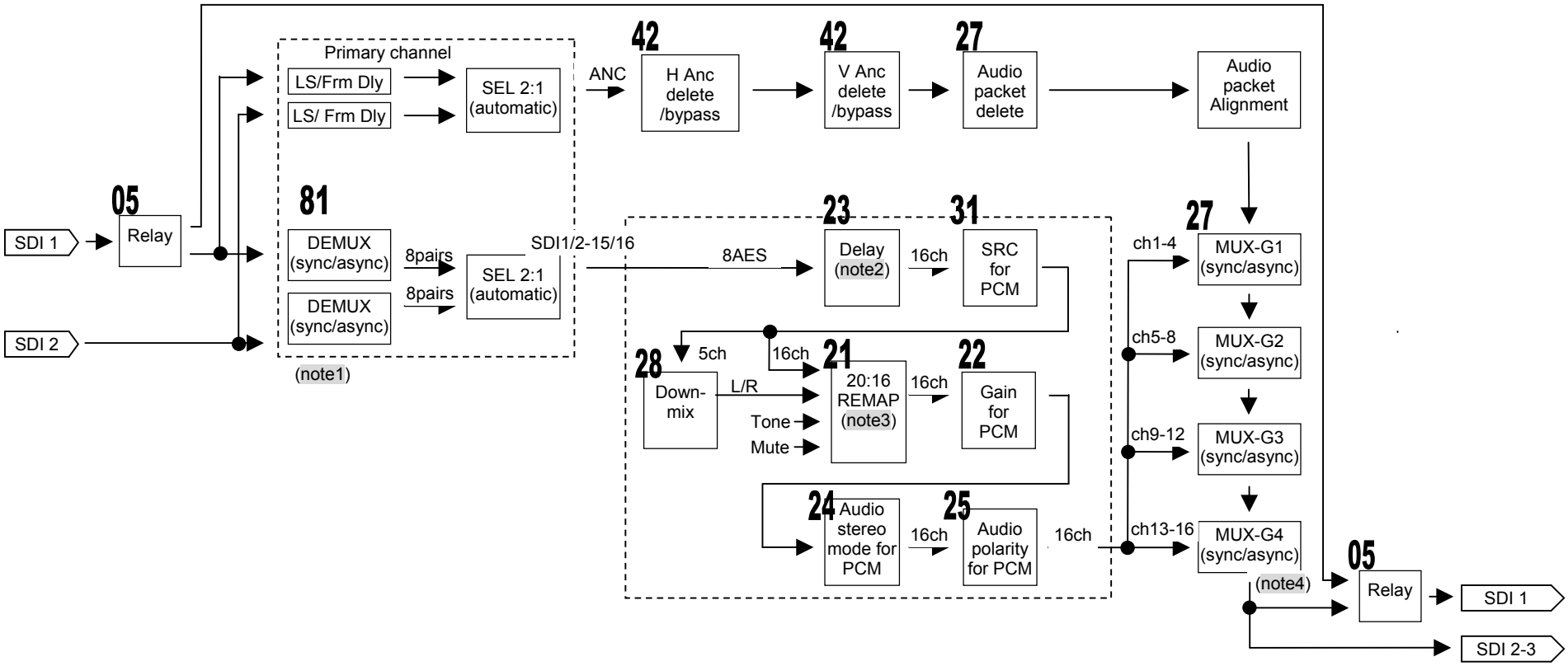

Note1: For SD-SDI, only synchronous input is available.
Note2: For non-PCM, the delay is set for each stereo pair.
Note3: For non-PCM, the re-map is set for each stereo pair.
Note4: For SD-SDI, only synchronous output is available. SD-SDI audios cannot be output to Group4.

The numbers in the figure above indicate the menu number.

5-6. AUDIO (UFM-30FS-DA)

5-6-1. If AES Input Selected:

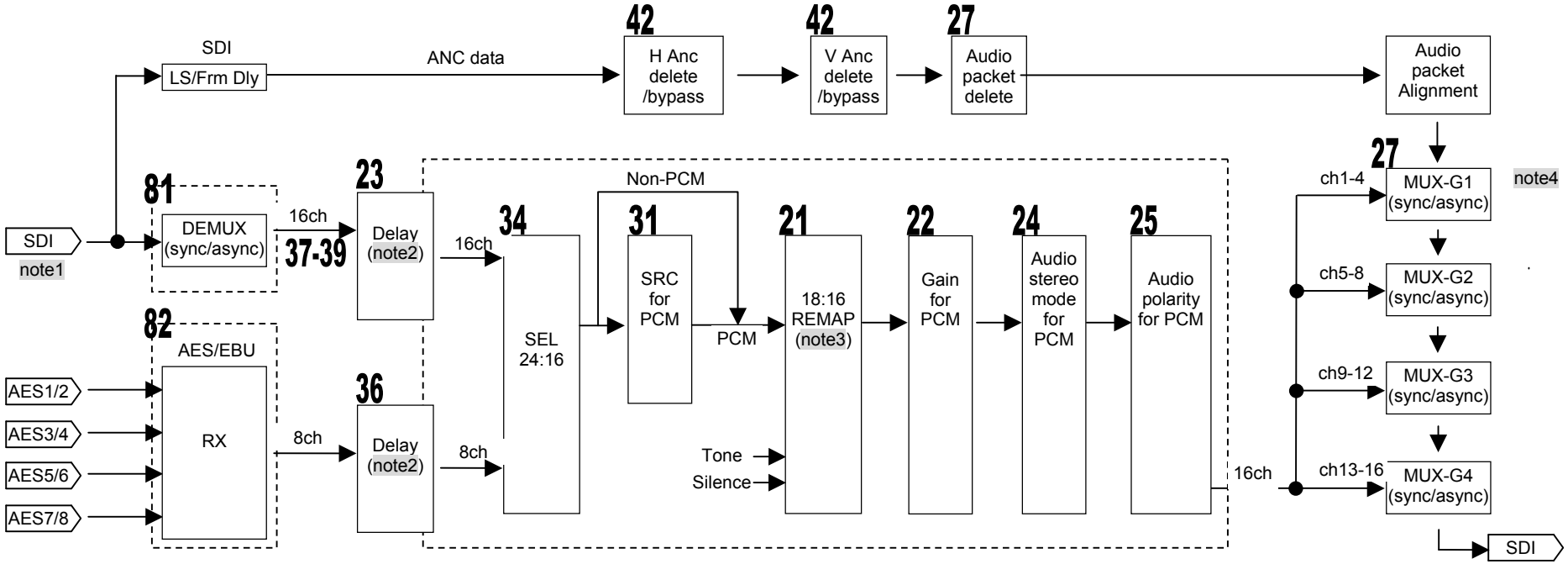

Note1: For SD-SDI, only synchronous input is available.
Note2: For non-PCM, the delay is set for each stereo pair.
Note3: For non-PCM, the re-map is set for each stereo pair.
Note4: For SD-SDI, only synchronous output is available. SD-SDI audios cannot be output to Group4.

The numbers in the figure above indicate the menu number.

5-6-2. If AES Output Selected:

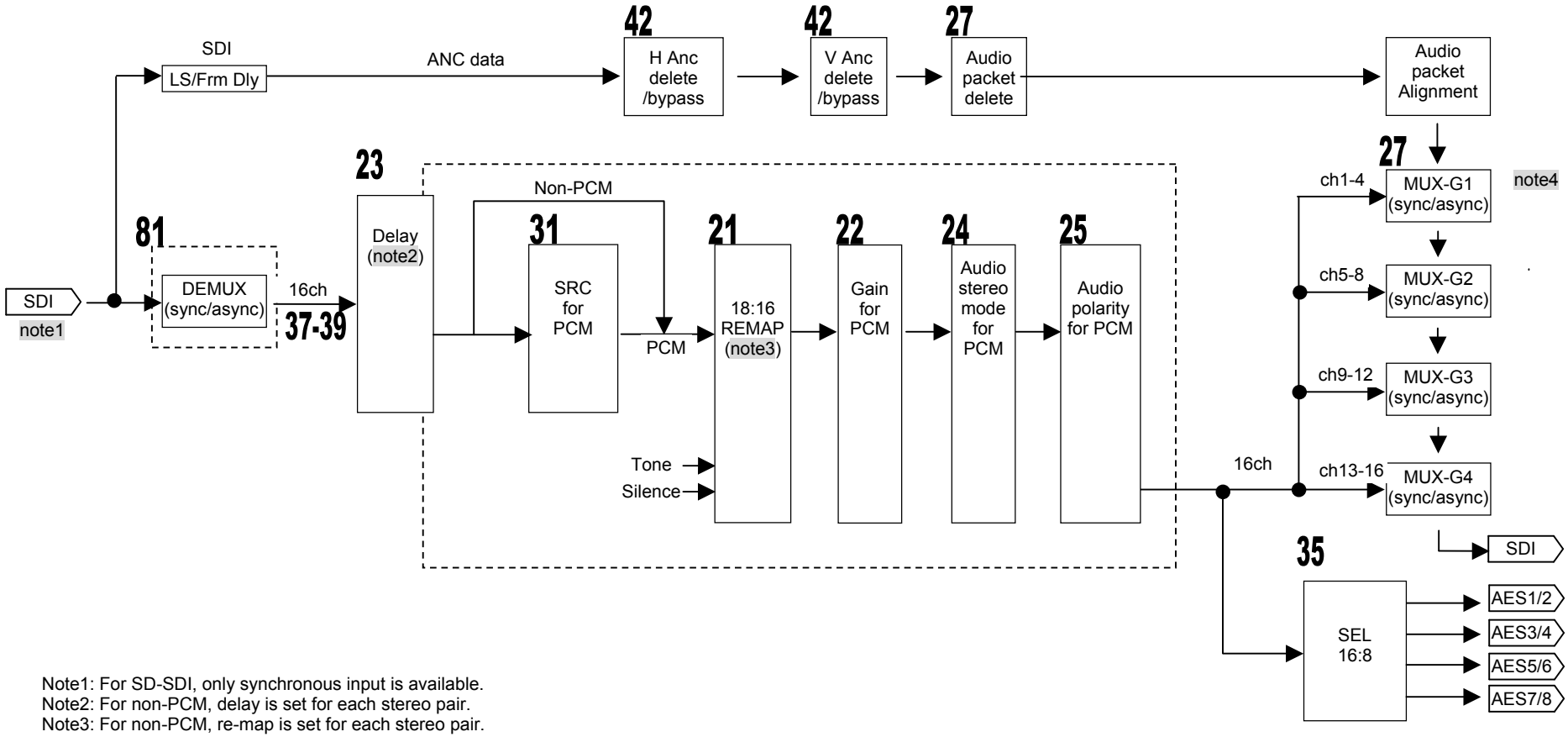

Note1: For SD-SDI, only synchronous input is available.
Note2: For non-PCM, delay is set for each stereo pair.
Note3: For non-PCM, re-map is set for each stereo pair.
Note4: For SD-SDI, only synchronous output is available. SD-SDI audio signals cannot be output to Group4.

The numbers in the figure above indicate the menu number.

6. Internal Settings

Dipswitch S3 on the front module of UFM-30FS series units allows you to set **Forced Bypass** mode and to initialize the UFM-30FS unit.

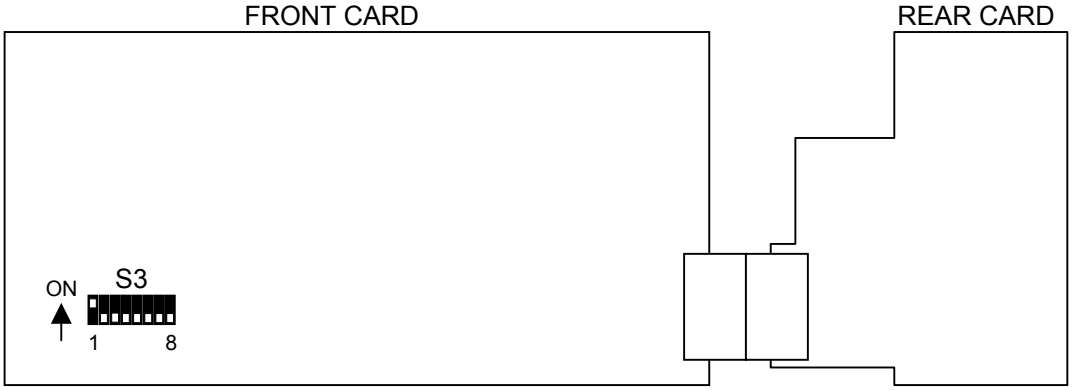

◆ **Dipswitch S3 Settings**

No.	Function	Setting		Factory default
		OFF	ON	
1	Forced Bypass mode (at startup) (UFM-30FS-R)	OFF	ON	OFF
2	FACTORY SET	-	-	OFF
3	FACTORY SET	-	-	OFF
4	FACTORY SET	-	-	OFF
5	FACTORY SET	-	-	OFF
6	Initialization	OFF	ON	OFF
7	FACTORY SET	-	-	OFF
8	NTSC/PAL Lock Mode	OFF	ON	OFF

IMPORTANT
Other than for S3-1, S3-6 and S3-8, do not change any S3 switch settings.

6-1. Initialization (S3-6)

The following procedure shows how to initialize UFM-30FS/30FS-R/30FS-DA units.

1) Power off the UFM frame. Change dipswitch S3-6 on the front module to ON.
2) Power on the UFM frame. When the initialization is complete, "Complete" is displayed and all settings are returned to factory default settings.
3) Power off the UFM frame. Set dipswitch S3-6 back to OFF.

IMPORTANT
Note that when initializing settings, all settings, including all event memory data, will return to their factory default after an initialization.

6-2. Forced Bypass Mode (S3-1)(UFM-30FS-R)

UFM-30FS series units will take a while for input video to lock to an external reference and during this time, output video may not be displayed correctly. To prevent this from occurring, UFM-30FS-R modules, which usually start in **Operate** mode, can be set to start in **Bypass** mode, which is called **Forced Bypass**. To enable Forced Bypass, proceed as follows:

1) Change dipswitch S3-1 on the front module to ON.

OFF (default)	Starts a UFM-30FS-R in Operate mode.
ON	Starts a UFM-30FS-R in Bypass mode.

2) Power on the UFM frame.
3) After verifying that GENLOCK LED lights up, set the "**05-01: Bypass/Operate**" setting back to **Operate** in the menu. This allows you to start the UFM-30FS-R with minimul disturbance.

NOTE
Note that loading events may change the mode to Operate. Forced Bypass does not take effect under the following cases. -When the system cannot be locked to an external reference. -When the system is operating in Input Lock mode.

6-3. NTSC/PAL Lock Mode

NTSC/PAL Lock mode is available when Black Burst signal is input and when input video and tri-level sync signal formats are those listed in the "Relationships between reference signal and SDI signal standards" table. (See page 33.)

UFM-30FS series units cannot lock any SDI signal to a reference input. They can lock SDI signals only when SDI and reference signal formats are those listed in the "Relationships between reference signal and SDI signal standards" table. (See page 33.)
If SDI and reference signals not listed in the table such as the following are input:

NTSC reference signal and an SDI signal such as 1080/50
PAL reference signal and an SDI signal such as 1080/59.94

UFM-30FS series cards operate and output SDI signals in free-running mode and a local clock oscillator cannot be locked to the reference signal (if NTSC/PAL Lock mode is disabled).
Ambient temperatures and individual differences in oscillator crystals affect the local clock and center frequency range stability of SDI output.
NTSC/PAL mode allows you to reduce the effect of this synchronization problem. Once NTSC/PAL Lock mode is enabled, SDI signals can be locked to and synchronized with the reference signal if the SDI and reference signal formats are those listed in the table (see page 33), and the center frequency range of SDI signals can be locked to the reference signal if they are not listed in the table.
NTSC/PAL mode is useful when multiple UFM-30FS series units that are installed on the same UFM frame operate in different video formats.

Note that if UFM-30FS series units are operated in NTSC/PAL mode, they cannot align frame or line phases between SDI and reference signals and the SDI signal phases output from these units are not aligned.

7. If Problems Occur

If any of the following problems occur during the operation of your UFM-30FS/UFM-30FS-R, proceed as indicated below to see if the problem can be corrected before assuming a unit malfunction has occurred.

Problem	Check	Action
Unable to operate using buttons on the front panel.	Is a message **"Lock"** displayed on the Menu display?	Press and hold down the PUSH switch to release the Panel lock. (See sec. 4-4-31.Front Panel Setting)
Video is paused.	Is **Video Freeze** turned on?	Set **FREEZE** to **Off**. (See sec. 4-4-4. Video Freeze)
Unable to output video.	Does the connected device support the video format? Or, Is the format selected at **System Format** the same as the input format?	UFM-30FS/UFM-30FS-R can be set to either automatically detect an input format or manually select an input format. If it is set to automatically detect a format, verify that the connected device supports the format being used. If it is set to manually select a format, verify that the same format as the actual input format is selected. (See sec. 4-4-26.)
Unable to freeze.	Is **Sync Mode** set to **Line Sync (LS)**?	Freeze cannot be turned on if **Sync Mode** is set to **Line Sync (LS)**. Set **Sync Mode** to **FRM Sync** or **Input**. (See sec. 4-4-26.)
Unable to save or load an event.	Is **Auto Event Load** set to **Enable**?	**Event Load** and **Event Save** are inoperative if **Auto Event Load** is set to **Enable**. Set **Auto Event Load** to **Disable**. (See 4-4-30. Event Memory)
Unable to output digital audio.	Is AES Input selected?	Set to **Output** for **AES Input/Output Select.** (See sec. 4-4-17.)

8. Specifications and Dimensions

8-1. Unit Specifications

Video Formats	1080/59.94i, 50i, 720/59.94p, 50p 525/60, 625/50
Video Formats (option)	1080/59.94p, 60p, 50p (Level A) 1080/60i, 720/60p, 1080/30p, 29.97p, 25p, 24p, 23.98p 1080/30PsF, 29.97PsF, 25PsF, 24PsF, 23.98PsF (1080/30PsF, /29.97PsF and /25PsF are treated and displayed as 1080/60i, /59.94i and 50i, respectively.)
Video Input	
UFM-30FS/FS-R	3G-SDI: 3 Gbps, HD-SDI: 1.5 Gbps or SD-SDI: 270 Mbps 75Ω BNC x 2
UFM-30FS-DA	HD-SDI: 1.5 Gbps or SD-SD: 270 Mbps 75Ω BNC x 1
Video Output	
UFM-30FS	3G-SDI: 3 Gbps, HD-SDI: 1.5 Gbps or SD-SDI: 270 Mbps 75Ω BNC x 4
UFM-30FS-R	3G-SDI: 3 Gbps, HD-SDI: 1.5 Gbps or SD-SDI: 270 Mbps 75Ω BNC x 3
UFM-30FS-DA	HD-SDI: 1.5 Gbps or SD-SDI: 270 Mbps 75Ω BNC x 1
Video I/O Process	
UFM-30FS	2 inputs(manual or auto input switching) -> 1 processing -> 4 outputs
UFM-30FS-R	2 inputs(manual or auto input switching) -> 1 processing -> 3 outputs
UFM-30FS-DA	1 input -> 1 processing -> 1 output
Auto Input Cable Equalization : BNC cable length:	
	3G-SDI: Up to 70 m (5C-FB or equivalent) HD-SDI: Up to 100 m (5C-FB or equivalent) SD-SDI: Up to 200 m (5C-2V or equivalent)
Signal Processing	4 : 2 : 2 Digital component
Quantization	Y: 10-bit, C: 10-bit
Sampling Frequency	3G-SDI: Y: 148.5 MHz C: 74 MHz HD-SDI: Y: 74 MHz, C: 37 MHz SD-SDI: Y: 13.5 MHz C: 6.75 MHz
Genlock Input	BB: 0.429 Vp-p (NTSC)/PAL: 0.45 Vp-p, Tri-level sync (HDTV), Supplied from UFM frame
Sync Mode	Frame Sync, Line Sync (1 H or multiple lines) or Input Sync mode selectable
System Phase Adjustment	
Frame Sync mode	H phase: -1/2 H to +1/2 H V phase: -1/2 frame to +1/2 frame Maximum delay: 1 frame + 1 H, Minimum delay: +1 H
Line Sync mode	H phase: -1/2 H to +1/2 H V phase: -1/2 frame to +1/2 frame Maximum delay: 1 H +1/2 H, Minimum delay: +1/2 H
AVDL mode	H phase: -1/2 H to +1/2 H V phase: -1/2 frame to +1/2 frame Maximum delay: 5 H +1/2 H, Minimum delay: +1/2 H (HD) Maximum delay: 1 H +1/2 H, Minimum delay: +1/2 H (SD)
Input Sync mode	H phase: -1/2 H to +1/2 H V phase: -1/2 frame to +1/2 frame Maximum delay: 1 frame, Minimum delay: +400 clk
Video Delay	Maximum 10 frames (Frame Sync or Input Sync)

Video Functions	Proc Amp, Video Clip, Video Freeze
Proc Amp	Video level: 0% to 200.0%, Chroma level: 0% to 200.0% Black level: -7.0% to 20.0%, Chroma phase: -180.0° to +180.0°
Video Clip	White clip: 50.0% to 109.0%, Black clip: -7.0% to 50.0%, Chroma clip: 50.0% to 113.0%
Audio Input	
Embedded Audio	HD: 16 channels (GROUP 1 to 4), 48 kHz, 16-bit to 24-bit (synchronous/asynchronous) SD: 16 channels (GROUP 1 to 4), 48 kHz,16-bit to 24-bit (synchronous only)
AES/EBU (UFM-30FS-DA only)	Unbalanced, 1.0 Vp-p, 75Ω, BNC x 4 for AES/EBU input/output, Maximum 4 pairs of stereo channels, 32/44.1/48 kHz, 16-bit to 24-bit
Audio Output	
Embedded Audio	HD: 16 channels (GROUP 1 to 4), 48 kHz, 24-bit (synchronous/asynchronous) SD: 12 channels (GROUP 1 to 3), 48 kHz, 24-bit (synchronous only)
AES/EBU (UFM-30FS-DA only)	Unbalanced, 1.0 Vp-p, 75Ω, BNC x 4 for AES/EBU input/output, Maximum 4 pairs of stereo channels, 48 kHz, 24-bit
Audio Delay	2 ms to 1,000 ms (Adjust per 1ms)
Audio Functions	Sampling Rate Converter (SRC), Gain Adjustment, Channel Re-mapping, Channel Mute (16 channels can be separately set), Downmixing (UFM-30FS/FS-R only)
Remote Control	Via Web browser or SNMP (UFM-30CTL required) UF-NETRU (UFM-30CTL required)
Temperature	0ºC to 40ºC
Humidity	30% to 85% (no condensation)
Power	Supplied from UFM frame, +24 VDC
Power Consumption	20 W, 0.8 A
Dimensions	106 (W) x 293.2 (D) mm (Front card) 108.5(W) x 91.6 (D) (Rear card)
Weight	0.5 kg
Consumables	None
Accessories	Operation manual
Options	UF-NETRU: Remote Control Unit UFM-30CTL: Remote Control Card UFM-3FS3G: 3G-SDI Support

8-2. External Dimensions

8-2-1. UFM-30FS

(All dimensions in mm)

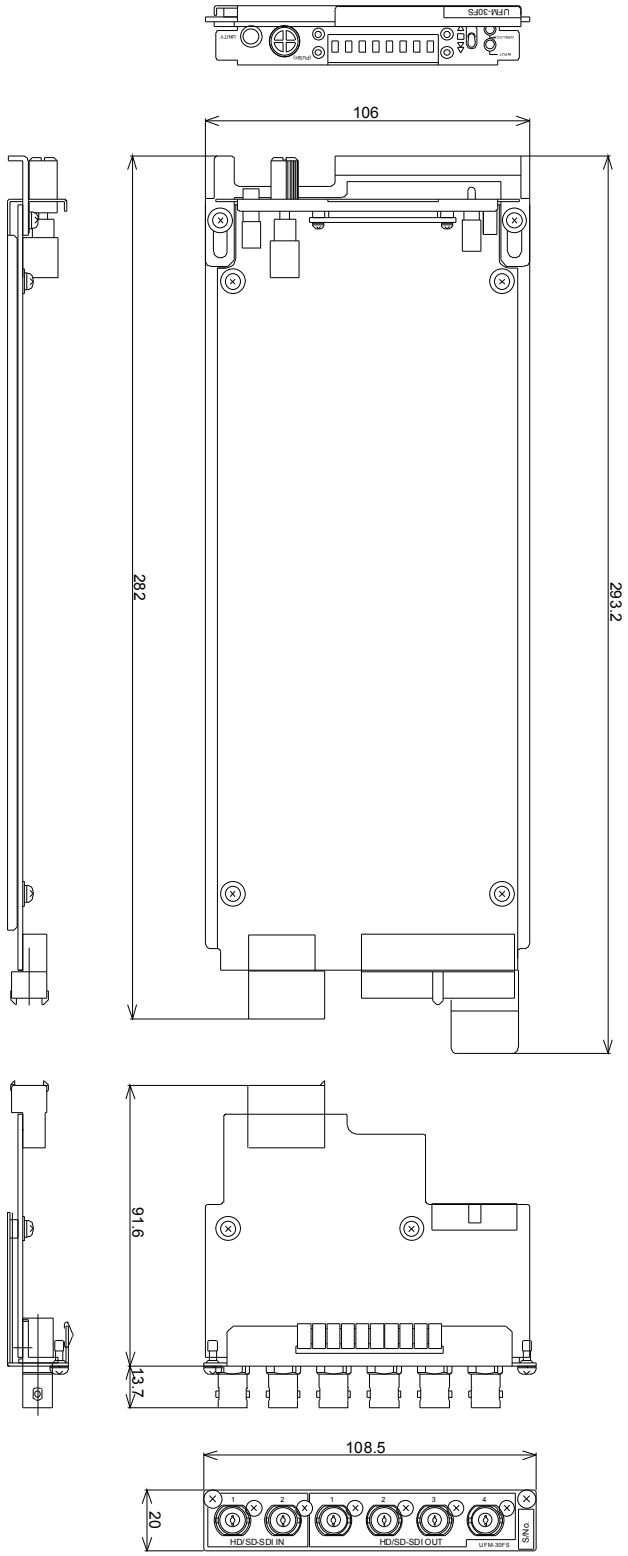

8-2-2. UFM-30FS-R

(All dimensions in mm)

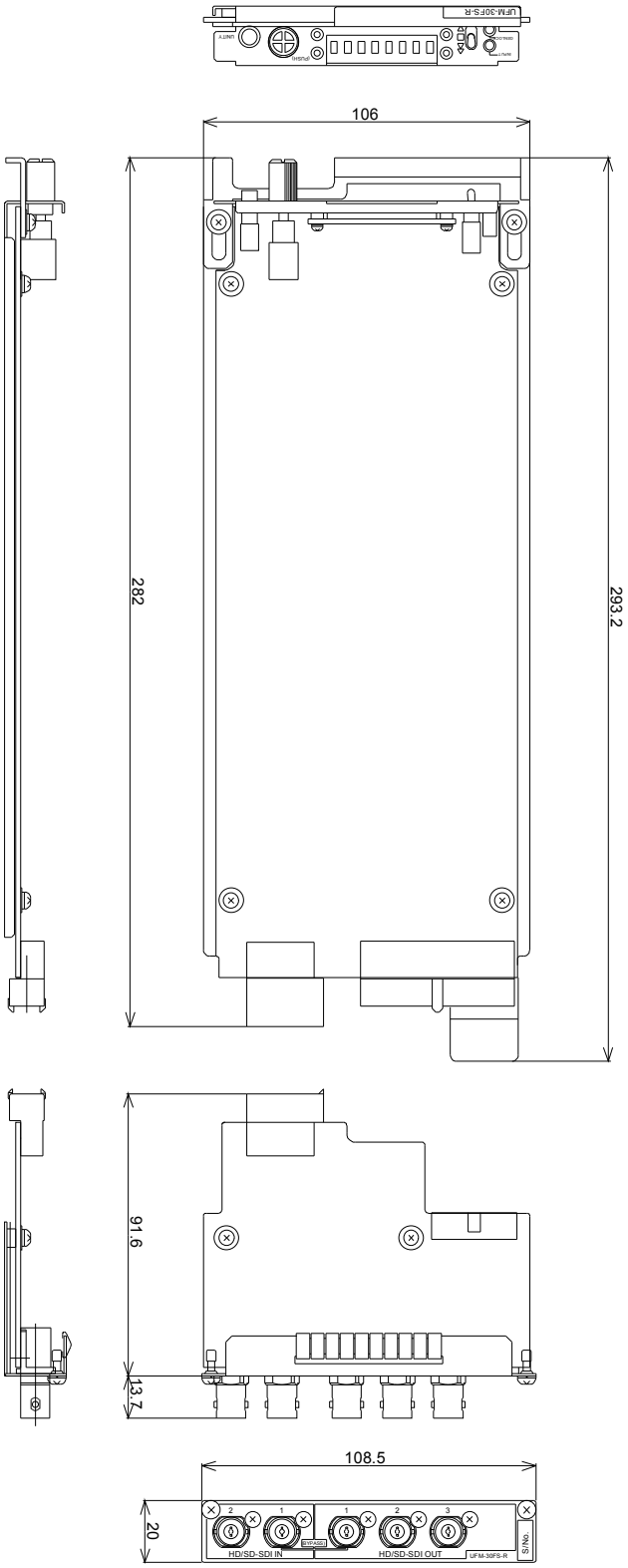

8-2-3. UFM-30FS-DA

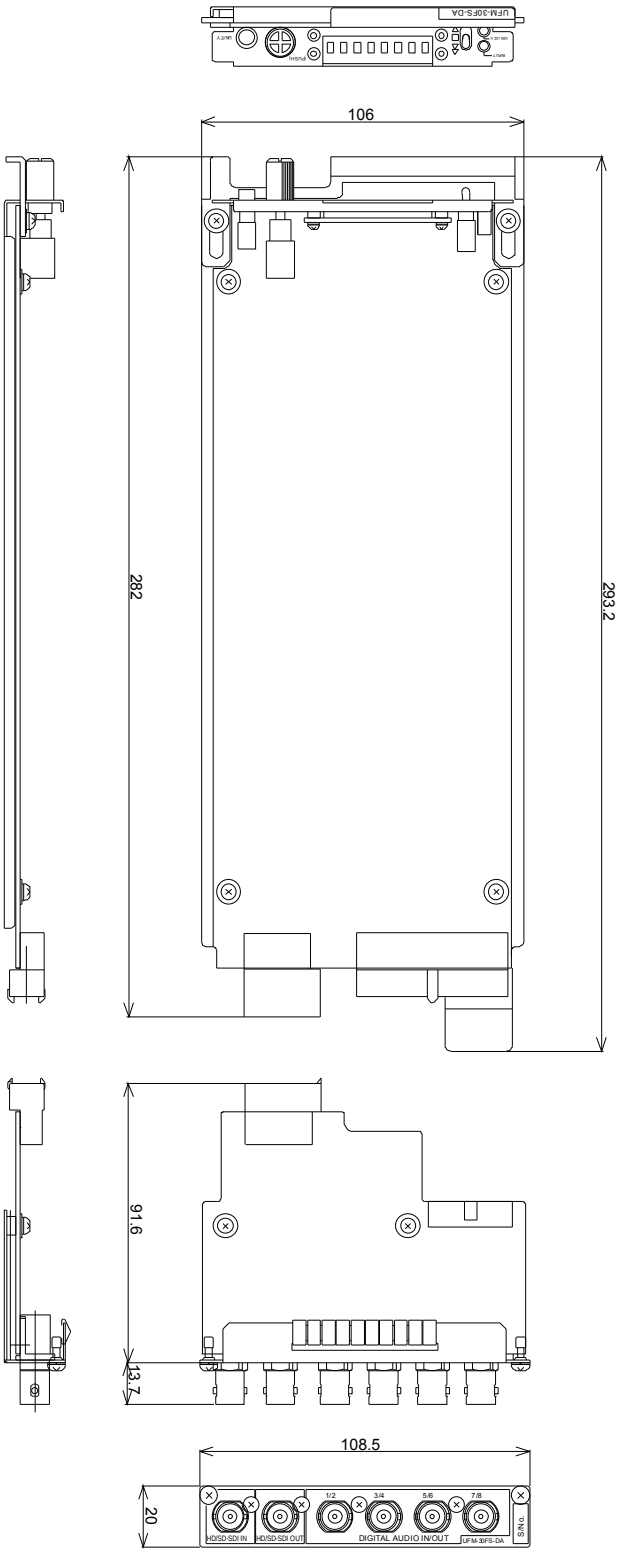

Warning

This equipment has been tested and found to comply with the limits for a Class A digital device, pursuant to Part 15 of FCC Rules. These limits are designed to provide reasonable protection against harmful interference when the equipment is operated in a commercial environment. This equipment generates, uses, and can radiate radio frequency energy and, if not installed and used in accordance with the instruction manual, may cause harmful interference to radio communications. Operation of this equipment in a residential area is likely to cause harmful interference, in which case the user will be required to correct the interference at his own expense.

11/14/2011 Printed in Japan

FOR-A COMPANY LIMITED

Head Office	3-8-1 Ebisu, Shibuya-ku, Tokyo 150-0013, Japan
Overseas Division	Phone: +81(0)3-3446-3936, Fax: +81(0)3-3446-1470
Japan Branch Offices	Osaka/Okinawa/Fukuoka/Hiroshima/Nagoya/Sendai/Sapporo
R&D/Production	Sakura Center/Sapporo Center

FOR-A America Corporate Office
11155 Knott Ave., Suite G&H, Cypress, CA 90630, USA
Phone: +1-714-894-3311 Fax: +1-714-894-5399

FOR-A America East Coast Office
2 Executive Drive, Suite 670, Fort Lee Executive Park, Fort Lee, NJ 07024, USA
Phone: +1-201-944-1120 Fax : +1-201-944-1132

FOR-A America Distribution & Service Center
2400 N.E. Waldo Road, Gainesville, FL 32609, USA
Phone: +1-352-371-1505 Fax: +1-352-378-5320

FOR-A Corporation of Canada
346A Queen Street West, Toronto, Ontario M5V 2A2, Canada
Phone: +1-416-977-0343 Fax: +1-416-977-0657

FOR-A Latin America & the Caribbean
5200 Blue Lagoon Drive, Suite 760, Miami, FL 33126, USA
Phone: +1-305-931-1700 Fax: +1-305-264-7890

FOR-A UK Limited
UNIT C71, Barwell Business Park, Leatherhead Road, Chessington Surrey, KT9 2NY, UK
Phone: +44(0)20-8391-7979 Fax: +44(0)20-8391-7978

FOR-A Italia S.r.l.
Via Volturno 37, 20047 Brugherio MB, Italy
Phone: +39-039-881-086/103 Fax: +39-039-878-140

FOR-A Corporation of Korea
801 Dangsan Bldg., 53-1 Dangsan-Dong, Youngdeungpo-Gu, Seoul 150-800, Korea
Phone: +82(0)2-2637-0761 Fax: +82(0)2-2637-0760

FOR-A China Limited
708B Huateng Bldg., No. 302, 3 District, Jinsong, Chaoyang, Beijing 100021, China
Phone: +86(0)10-8721-6023 Fax: +86(0)10-8721-6033

*The contents of this manual are subject to change without notice.